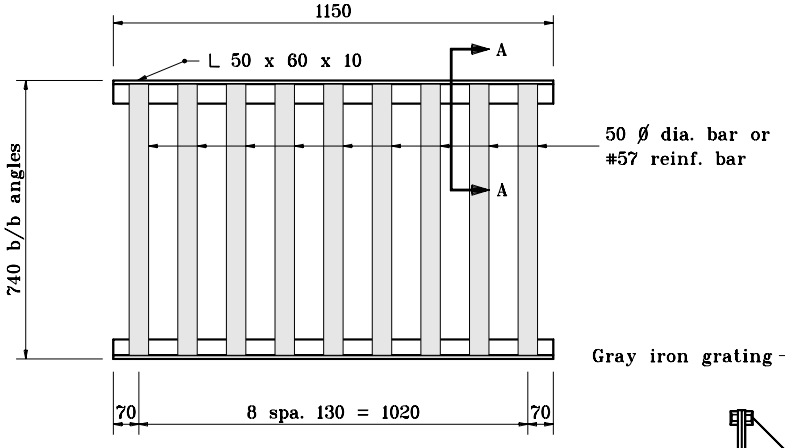

ALTERNATE STEEL GRATING

(To be used with steel frame type 12 or 12A)

GENERAL NOTES

1. Spacing shall be 50 c. to c. min., and 60 c. to c. max.
2. The dimensions of the angle iron frame shall be as shown except that the A dimension may vary according to type of grating used.

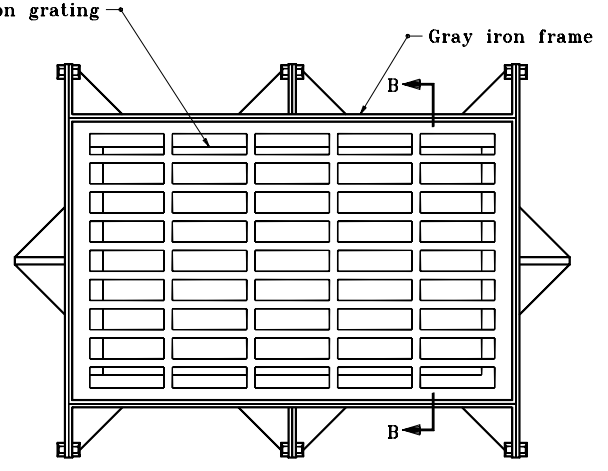

GRATE AND FRAME CASTING
ALTERNATE TYPE 12A

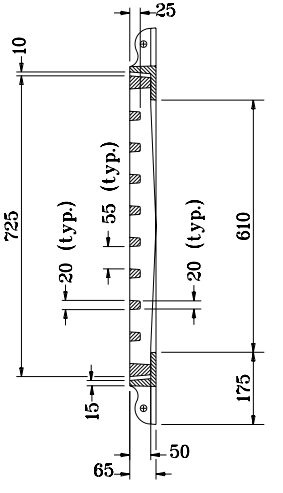

SECTION B–B

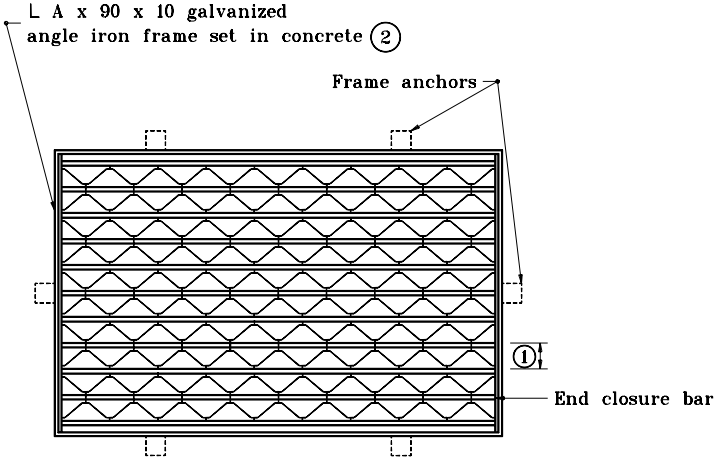

STEEL GRATING AND
FRAME TYPE 12A

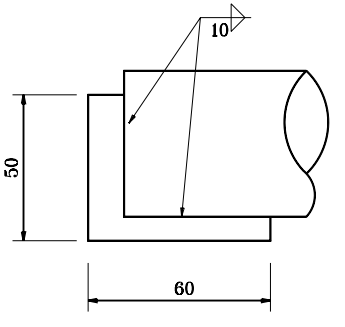

SECTION A–A

All dimensions are in mm unless otherwise specified.

INDIANA DEPARTMENT OF TRANSPORTATION

STEEL GRATING TYPE 12A
FRAME AND GRATE

SEPTEMBER 1998

STANDARD DRAWING NO. **720-ICCA-12**

ANTHONY L. UREMOVICH REGISTERED No. 18095 STATE OF INDIANA PROFESSIONAL ENGINEER

DESIGN STANDARDS ENGINEER

/s/ Anthony L. Uremovich 9-01-98
DESIGN STANDARDS ENGINEER DATE

/s/ Donald W. Lucas 9-01-98
CHIEF HIGHWAY ENGINEER DATE

Source Sheet: MS