GENERAL NOTES

1. Curb box adjustable 133 to 222.

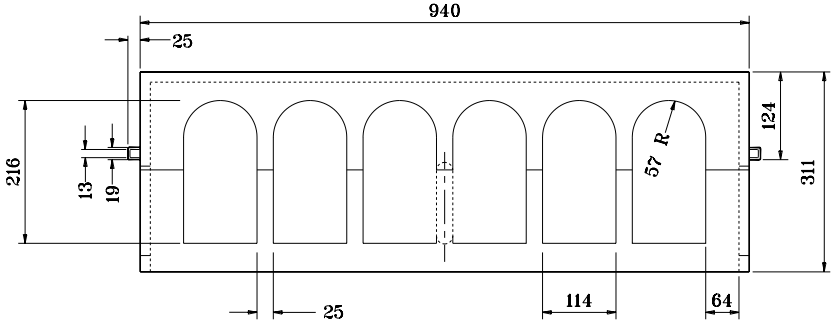

FRONT

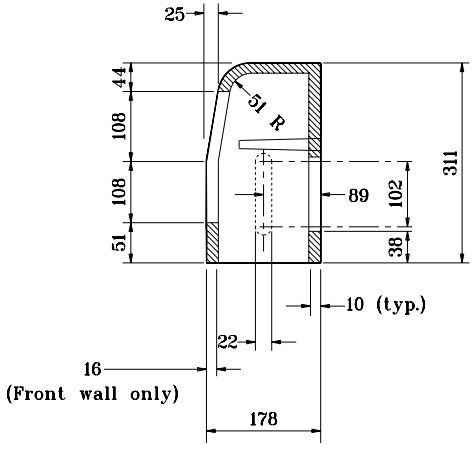

SECTION A–A

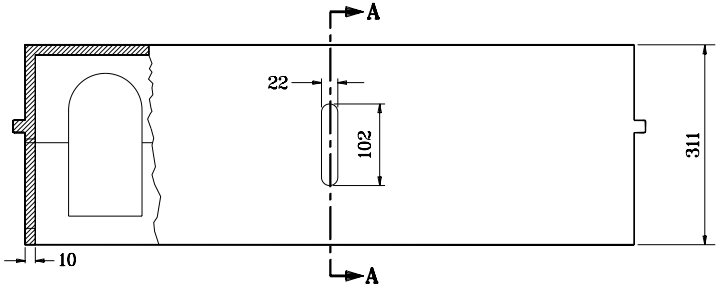

BACK

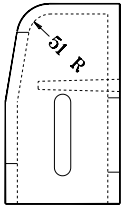

SIDE

All dimensions are in mm unless otherwise specified.

INDIANA DEPARTMENT OF TRANSPORTATION

CASTING TYPE 10
CURB BOX

SEPTEMBER 1998

STANDARD DRAWING NO. **720–ICCA–09A**

ANTHONY L. UREMOVICH REGISTERED No. 18095 STATE OF INDIANA PROFESSIONAL ENGINEER

DESIGN STANDARDS ENGINEER

/s/ Anthony L. Uremovich — DESIGN STANDARDS ENGINEER — 9–01–98 DATE

/s/ Donald W. Lucas — CHIEF HIGHWAY ENGINEER — 9–01–98 DATE

Source Sheet: MC1