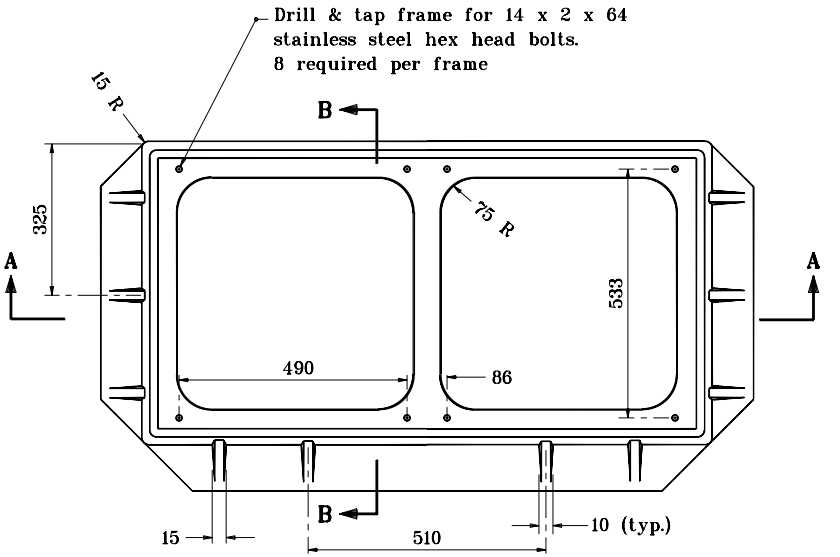

PLAN

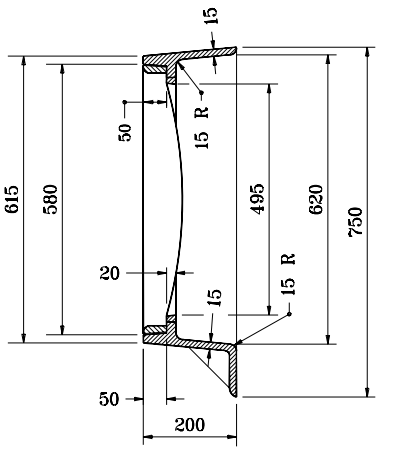

SECTION B–B

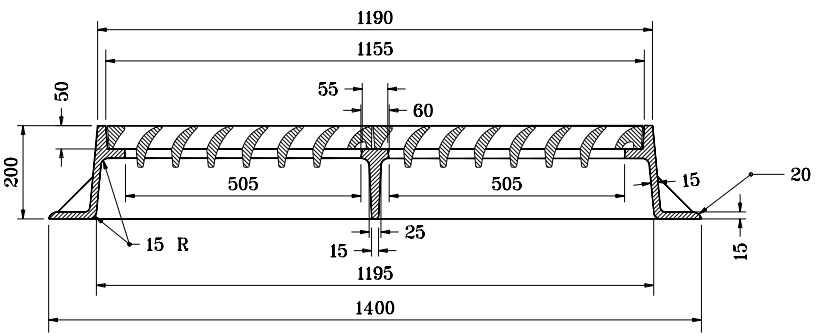

SECTION A–A

All dimensions are in mm unless otherwise specified.

INDIANA DEPARTMENT OF TRANSPORTATION

CASTING TYPE 5
FRAME

SEPTEMBER 2001

STANDARD DRAWING NO. **720–ICCA–01**

ANTHONY L. UREMOVICH REGISTERED No. 18095 STATE OF INDIANA PROFESSIONAL ENGINEER

DESIGN STANDARDS ENGINEER

/s/ Anthony L. Uremovich 9–04–01
DESIGN STANDARDS ENGINEER DATE

/s/ Firooz Zandi 9–04–01
CHIEF HIGHWAY ENGINEER DATE