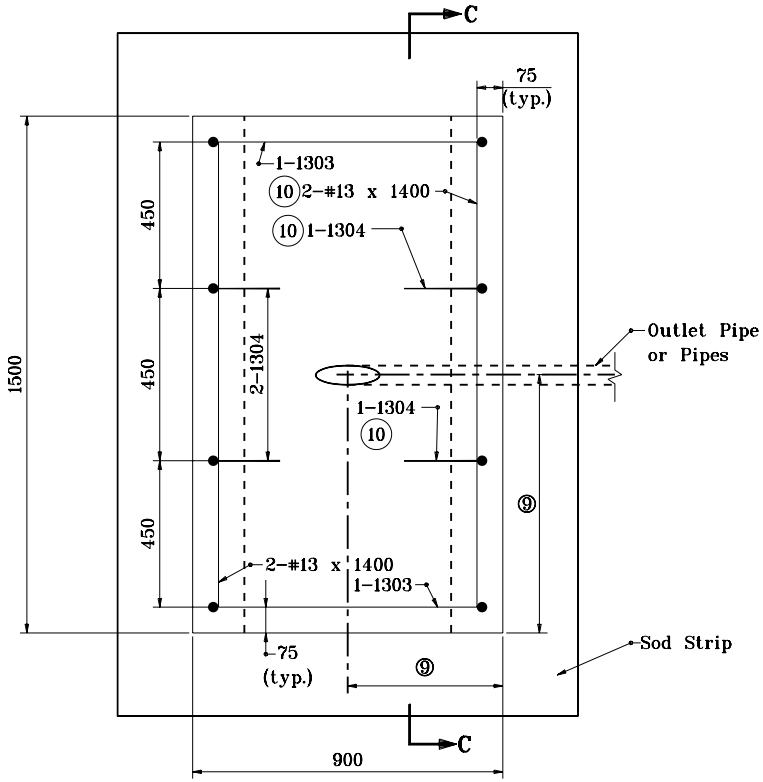

PLAN VIEW

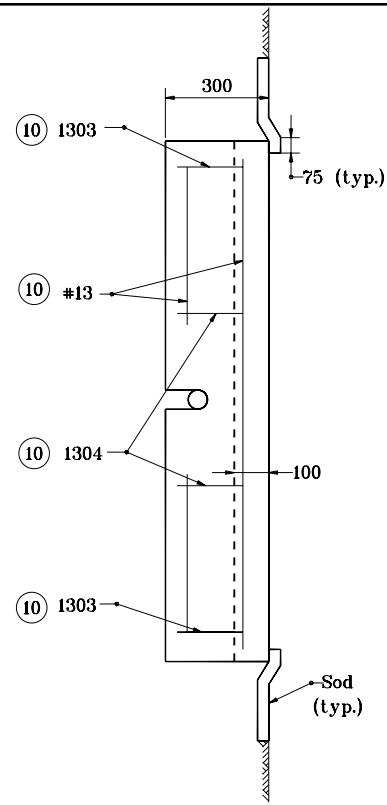

SECTION C-C

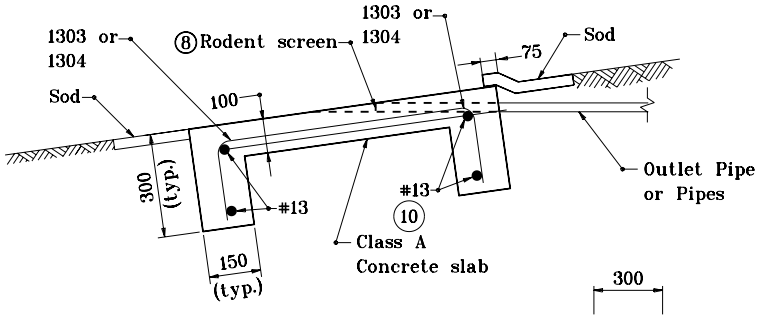

TYPICAL SECTION

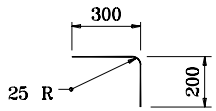

1304 x 500

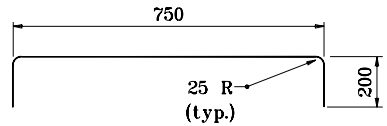

1303 x 1150

NOTE:

1. See Standard Drawing 718-UNDR-07 for General Notes pertaining to this sheet.

All dimensions are in mm unless otherwise specified.

INDIANA DEPARTMENT OF TRANSPORTATION

OUTLET PROTECTOR, TYPE 3

JANUARY 2000

STANDARD DRAWING NO. **718-UNDR-05**

ANTHONY L. UREMOVICH REGISTERED No. 18095 STATE OF INDIANA PROFESSIONAL ENGINEER

DESIGN STANDARDS ENGINEER

/s/ Anthony L. Uremovich 1-03-00
DESIGN STANDARDS ENGINEER DATE

/s/ Firooz Zandi 1-03-00
CHIEF HIGHWAY ENGINEER DATE