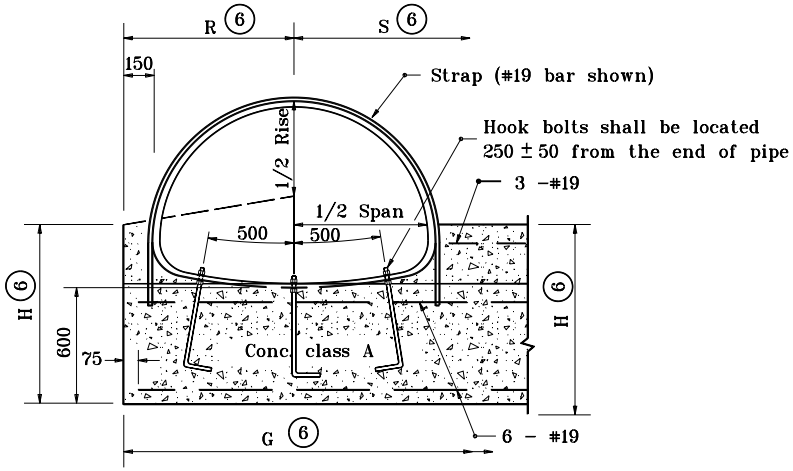

ANCHOR FOR STRUCTURAL PLATE PIPE–ARCH
PARTIAL ELEVATION

GENERAL NOTES

1. Anchor straps shall be used at both upstream and downstream ends of all structural plate pipes and pipe–arches.
2. See Standard Drawing 715–PASD–01 for anchor strap details.
3. Hook bolts and anchor straps shall be used for all structural plate pipes and pipe–arches with a diameter or span of 2100 or greater.
4. See Standard Drawing 715–PAHB–01 for hook bolt details.
5. Riprap shall be placed at the ends of pipe structures when shown on the plans.

(6) For dimension, enter chart on Standard Drawings 717–ANCH–01 or 717–ANCH–02 with known dimension D or span and rise.

All dimensions are in mm unless otherwise specified.

INDIANA DEPARTMENT OF TRANSPORTATION

MULTIPLE PIPE CONCRETE ANCHOR

JANUARY 1998

STANDARD DRAWING NO. **717–MPCA–02**

ANTHONY L. URENOVICH REGISTERED No. 18095 STATE OF INDIANA PROFESSIONAL ENGINEER

DESIGN STANDARDS ENGINEER

/s/ Anthony L. Urenovich 1-02-98
DESIGN STANDARDS ENGINEER DATE

/s/ Donald W. Lucas 1-02-98
CHIEF HIGHWAY ENGINEER DATE

Source Sheet: ME1A