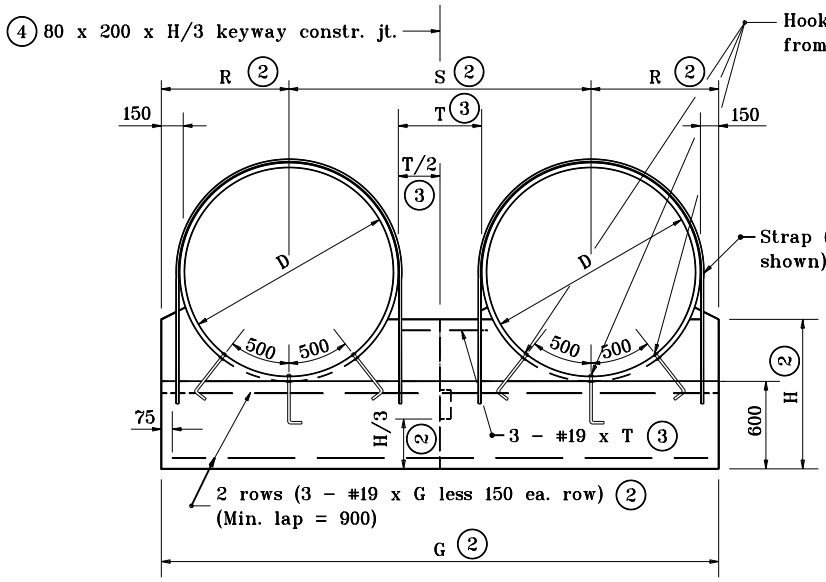

ANCHOR FOR DOUBLE PIPE INSTALLATION
FRONT ELEVATION

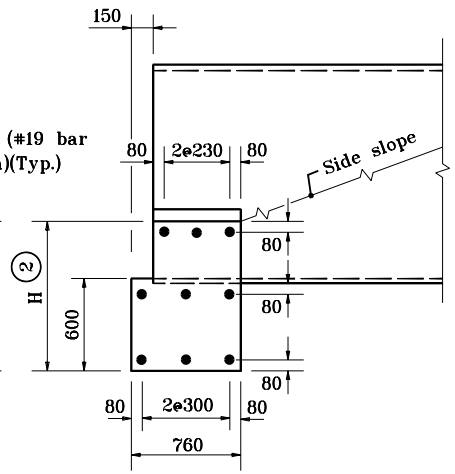

SECTION THROUGH ANCHOR

GENERAL NOTES

1. Circular pipes shown. For details of structural plate pipe-arches alternates, see partial elevations on Standard Drawing 717-MPCA-02.

(2) For dimension, enter chart on Standard Drawing 717-ANCH-01 with known dimension D.

(3) T = Clear distance between pipes.
For D less than 1200, T = 600.
For D of 1200 to 2400 T = 1/2 D
For D greater than 2400, T = 1200.

(4) No joint required if G is less than or equal to 9000. One joint required if G is greater than 9000 but less than or equal to 12800. Two joints required if G is greater than 12800.

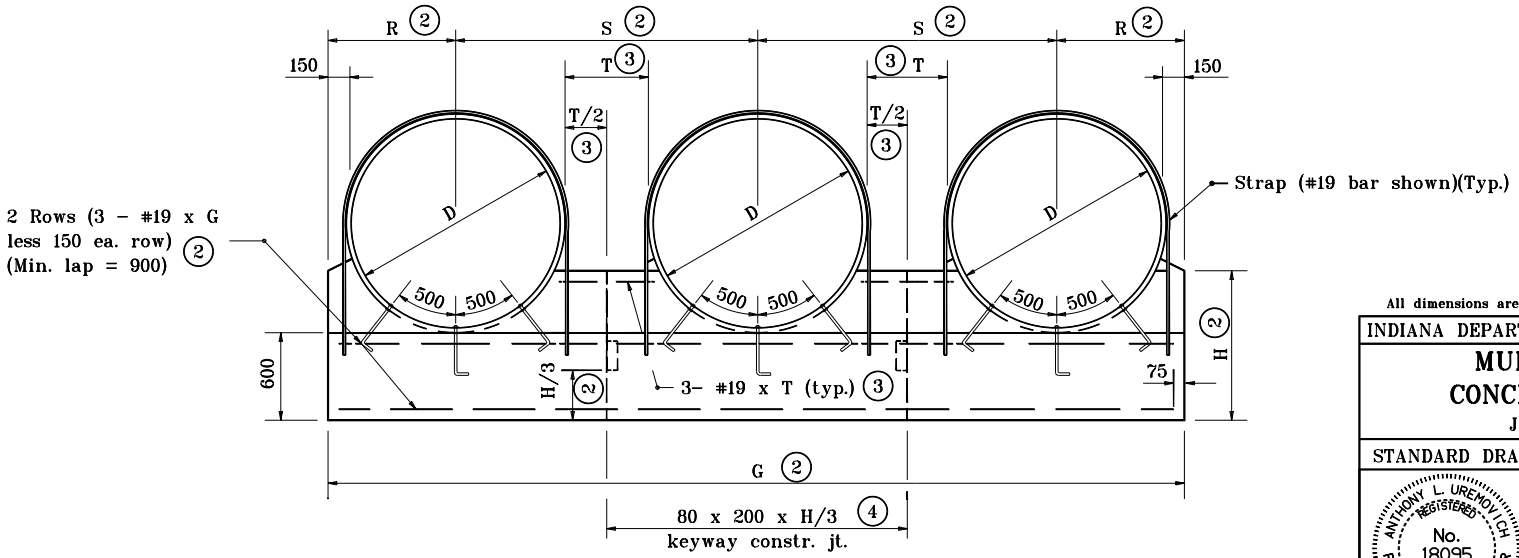

ANCHOR FOR TRIPLE PIPE INSTALLATION
FRONT ELEVATION

All dimensions are in mm unless otherwise specified.

INDIANA DEPARTMENT OF TRANSPORTATION

MULTIPLE PIPE CONCRETE ANCHOR

JANUARY 1998

STANDARD DRAWING NO. **717-MPCA-01**

ANTHONY L. UREMOVICH REGISTERED No. 18095 STATE OF INDIANA PROFESSIONAL ENGINEER

DESIGN STANDARDS ENGINEER

/s/ Anthony L. Uremovich 1-02-98
DESIGN STANDARDS ENGINEER DATE

/s/ Donald W. Lucas 1-02-98
CHIEF HIGHWAY ENGINEER DATE

Source Sheet: ME1A