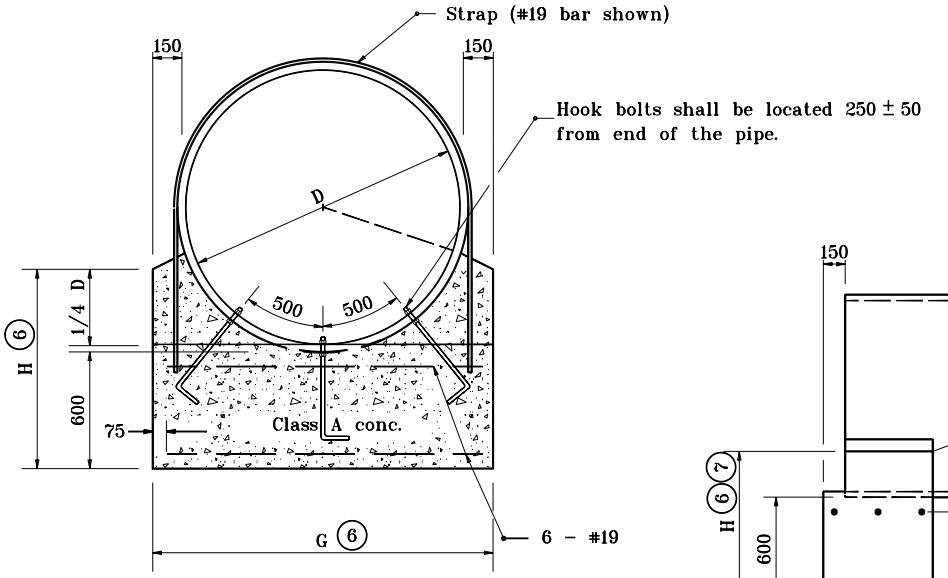

ANCHOR FOR CIRCULAR CORRUGATED METAL PIPE
FRONT ELEVATION

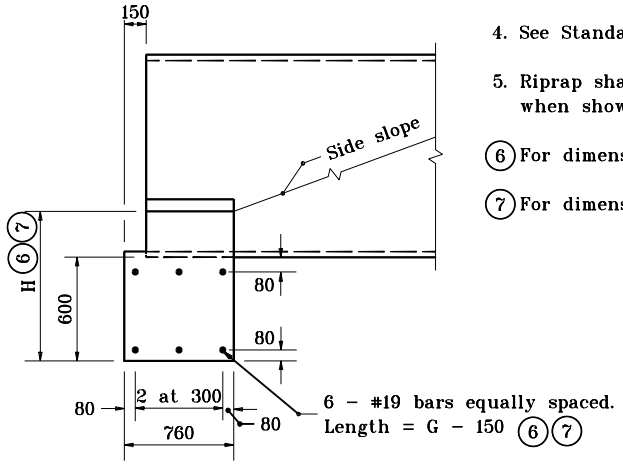

SIDE ELEVATION

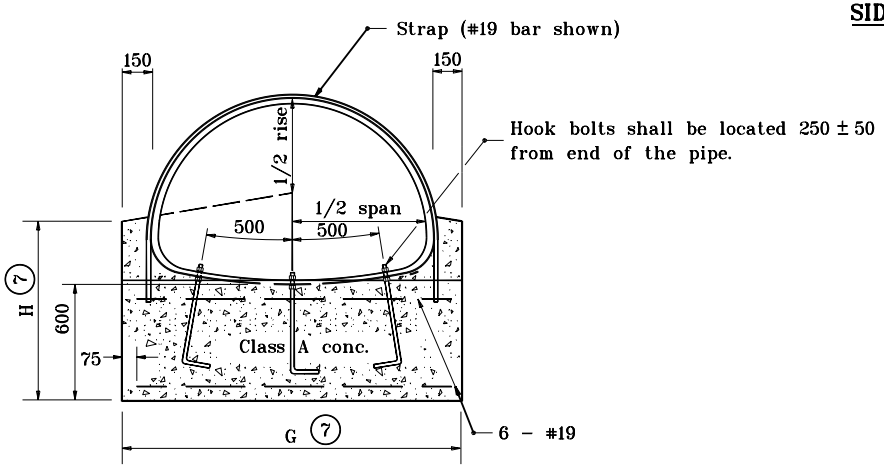

ANCHOR FOR CORRUGATED METAL PIPE-ARCH
FRONT ELEVATION

GENERAL NOTES

1. Anchor straps shall be used at both upstream and downstream ends of all C.M. pipes with a diameter or span of 1050 or greater.
2. See Standard Drawing 715-PASD-01 for anchor strap details.
3. Hook bolts and anchor straps shall be used for all C.M. pipes with a diameter or span of 2100 or greater.
4. See Standard Drawing 715-PAHB-01 for hook bolt details.
5. Riprap shall be placed at the ends of pipe structures when shown on plans.

(6) For dimension chart see Standard Drawing 715-ANCH-01.

(7) For dimension chart see Standard Drawing 715-ANCH-02.

LEGEND

C.M. = Corrugated Metal

All dimensions are in mm unless otherwise specified.

INDIANA DEPARTMENT OF TRANSPORTATION

SINGLE PIPE CONCRETE ANCHOR

JANUARY 1998

STANDARD DRAWING NO. **715-SPCA-01**

ANTHONY L. UREMOVICH REGISTERED No. 18095 STATE OF INDIANA PROFESSIONAL ENGINEER

/s/ Anthony L. Uremovich 1-02-98
DESIGN STANDARDS ENGINEER DATE

/s/ Donald W. Lucas 1-02-98
CHIEF HIGHWAY ENGINEER DATE

DESIGN STANDARDS ENGINEER

Source Sheet: ME1