GENERAL NOTES

1. Longitudinal safety bar shall be welded to transverse bars. For cross structure and section, if S ⟨ 750, no longitudinal safety bar is required. If S ⟩ 750, longitudinal safety bar(s) shall be provided so S_1 ⟨ 750.

2. Bolts shall be oriented with threads to inside of end section.

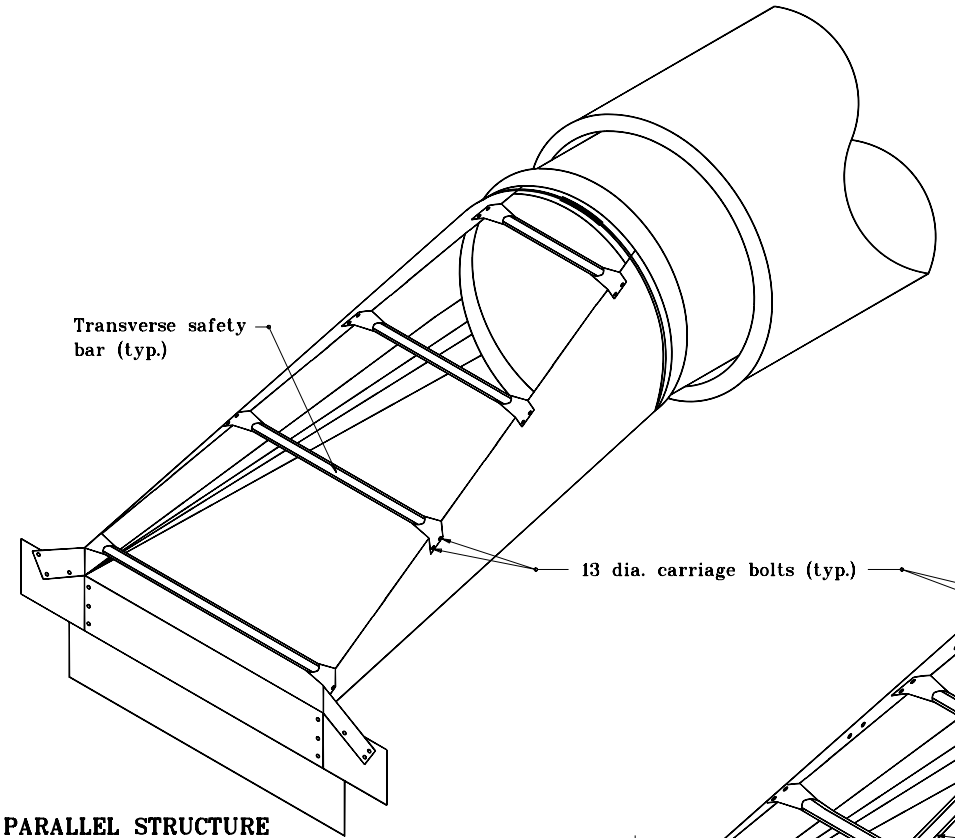

PARALLEL STRUCTURE END SECTION

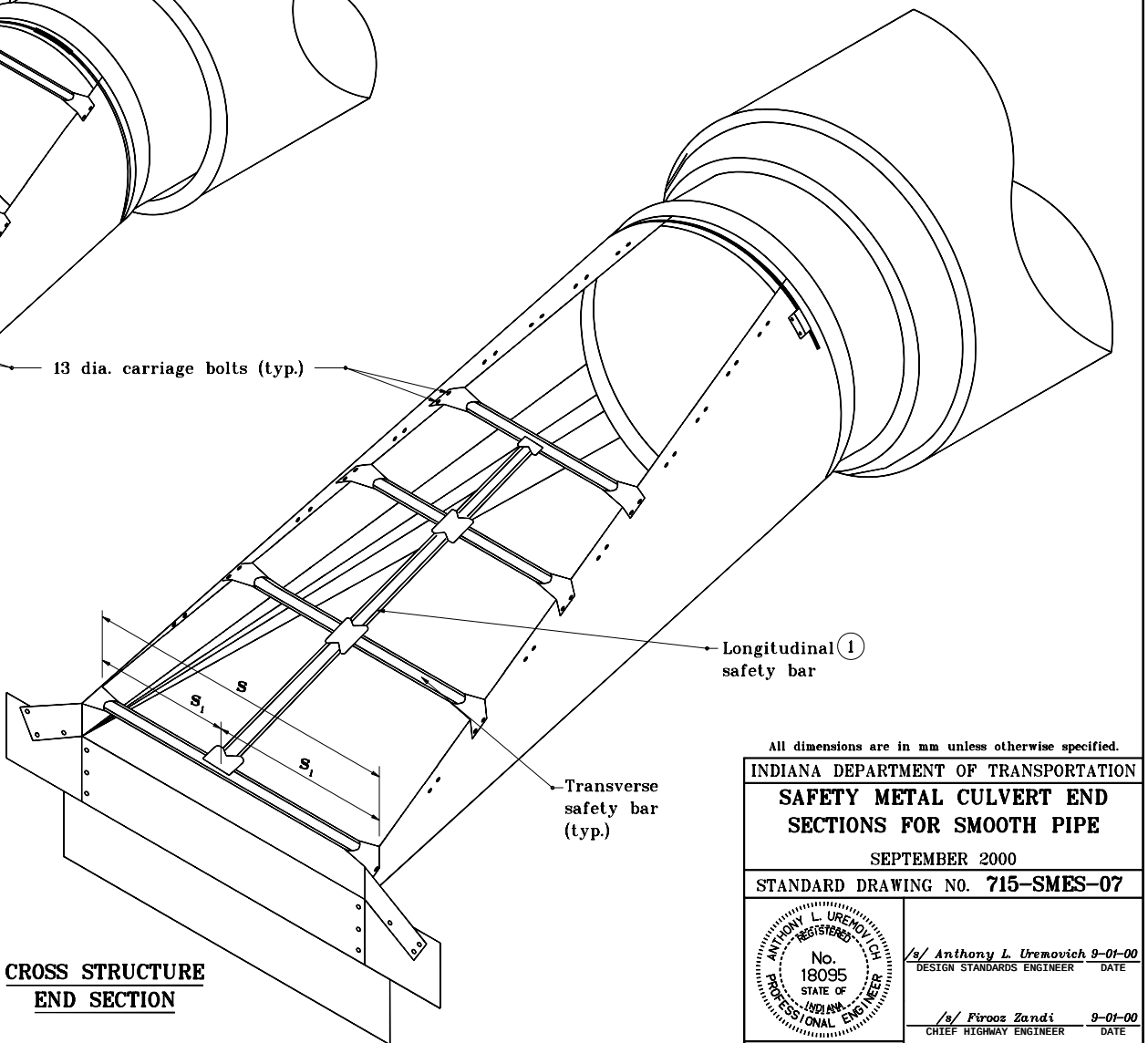

CROSS STRUCTURE END SECTION

LEGEND

s – Overall span

$_1$ Span between end section edge and longitudinal safety bar or between longitudinal safety bars.

$$s_1 = \frac{s}{n + 1}$$

where n = Number of longitudinal safety bars

All dimensions are in mm unless otherwise specified.

INDIANA DEPARTMENT OF TRANSPORTATION

SAFETY METAL CULVERT END SECTIONS FOR SMOOTH PIPE

SEPTEMBER 2000

STANDARD DRAWING NO. **715-SMES-07**

ANTHONY L. UREMOVICH REGISTERED No. 18095 STATE OF INDIANA PROFESSIONAL ENGINEER

DESIGN STANDARDS ENGINEER

/s/ Anthony L. Uremovich 9-01-00
DESIGN STANDARDS ENGINEER DATE

/s/ Firooz Zandi 9-01-00
CHIEF HIGHWAY ENGINEER DATE