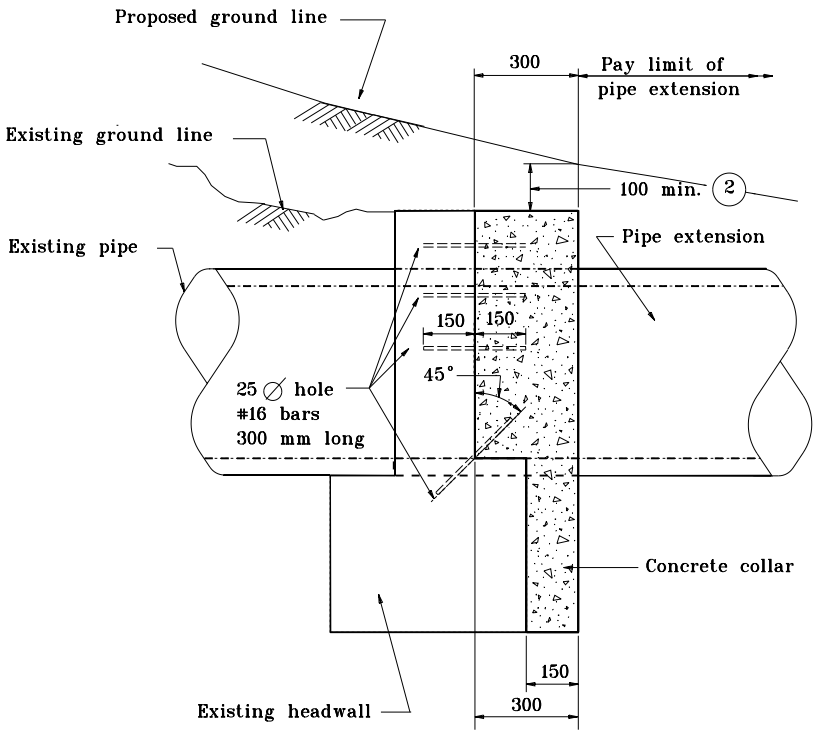


## SIDE VIEW

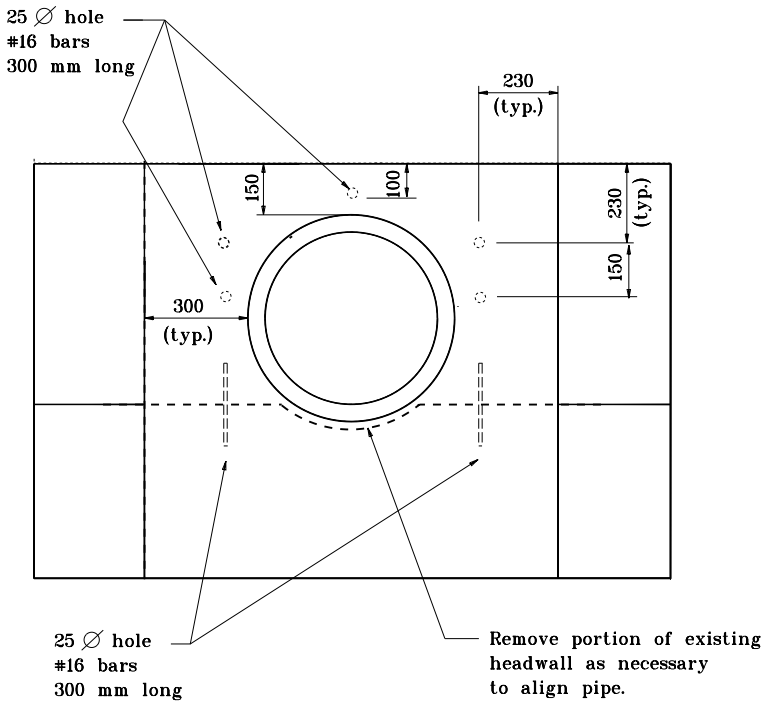


## END VIEW

## NOTES:

1. For other types of pipe end structures and pipes larger then 825 mm ∅, collar details are shown on the plans.

(2) Remove portions of existing headwall if required to maintain 100 mm ground cover.

All dimensions are in mm unless otherwise specified.

INDIANA DEPARTMENT OF TRANSPORTATION

**CONCRETE COLLAR FOR PIPE EXTENSION**

JANUARY 1998

STANDARD DRAWING NO. **715-PCEX-01**

ANTHONY L. UREMOVICH REGISTERED No. 18095 STATE OF INDIANA PROFESSIONAL ENGINEER

DESIGN STANDARDS ENGINEER

/s/ Anthony L. Uremovich 1-02-98
DESIGN STANDARDS ENGINEER DATE

/s/ Donald W. Lucas 1-02-98
CHIEF HIGHWAY ENGINEER DATE

Source Sheet: MU