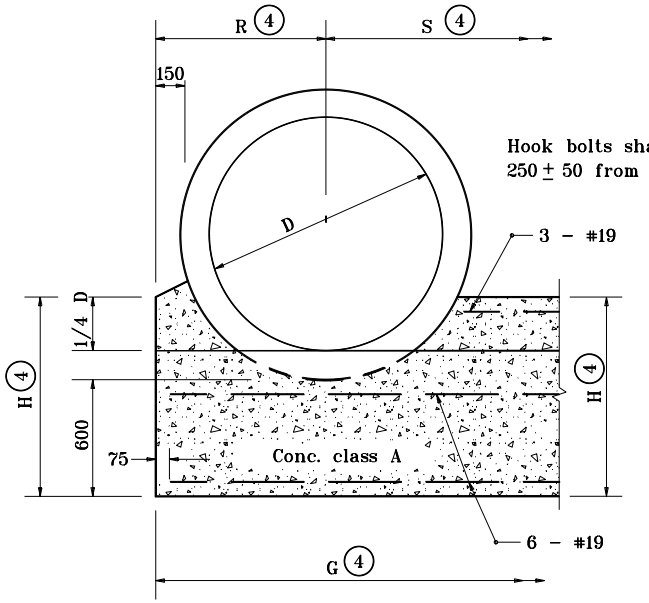

ANCHOR FOR
REINFORCED CONCRETE PIPE
PARTIAL ELEVATION

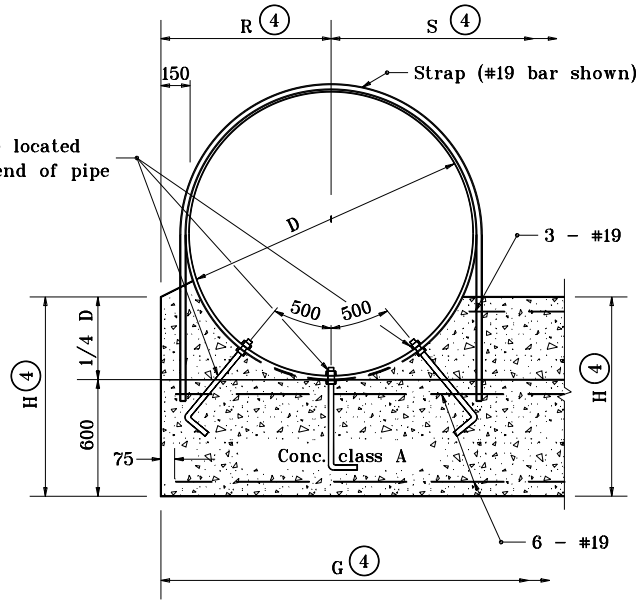

ANCHOR FOR
CORRUGATED METAL PIPE
PARTIAL ELEVATION

GENERAL NOTES

1. Anchor straps shall be used at both upstream and downstream ends of all C.M. pipes with a diameter or span of 1000 or greater.
2. Hook bolts and anchor straps shall be used for all C.M. pipes with a diameter or span of 2200 or greater.
3. Riprap shall be placed at the ends of pipe structures when shown on the plans.

(4) For dimension, enter chart on Standard Drawing 715-ANCH-01 with known dimension D.

(5) For dimension, enter chart on Standard Drawing 715-ANCH-02 with known span and rise.

LEGEND

C.M. = Corrugated Metal

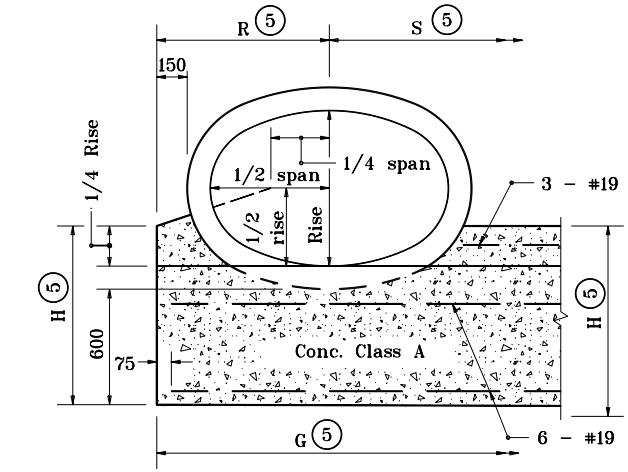

ANCHOR FOR
REINFORCED CONCRETE HORIZONTAL ELLIPTICAL PIPE
PARTIAL ELEVATION

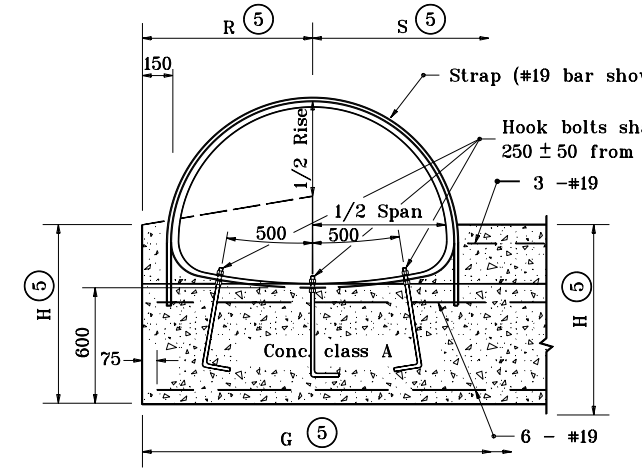

ANCHOR FOR CORRUGATED METAL PIPE-ARCH
PARTIAL ELEVATION

All dimensions are in mm unless otherwise specified.

INDIANA DEPARTMENT OF TRANSPORTATION

MULTIPLE PIPE CONCRETE ANCHOR

JANUARY 1998

STANDARD DRAWING NO. **715-MPCA-02**

ANTHONY L. UREMOVICH REGISTERED No. 18095 STATE OF INDIANA PROFESSIONAL ENGINEER

/s/ Anthony L. Uremovich 1-02-98
DESIGN STANDARDS ENGINEER — DATE

/s/ Donald W. Lucas 1-02-98
CHIEF HIGHWAY ENGINEER — DATE

DESIGN STANDARDS ENGINEER

Source Sheet: ME1A