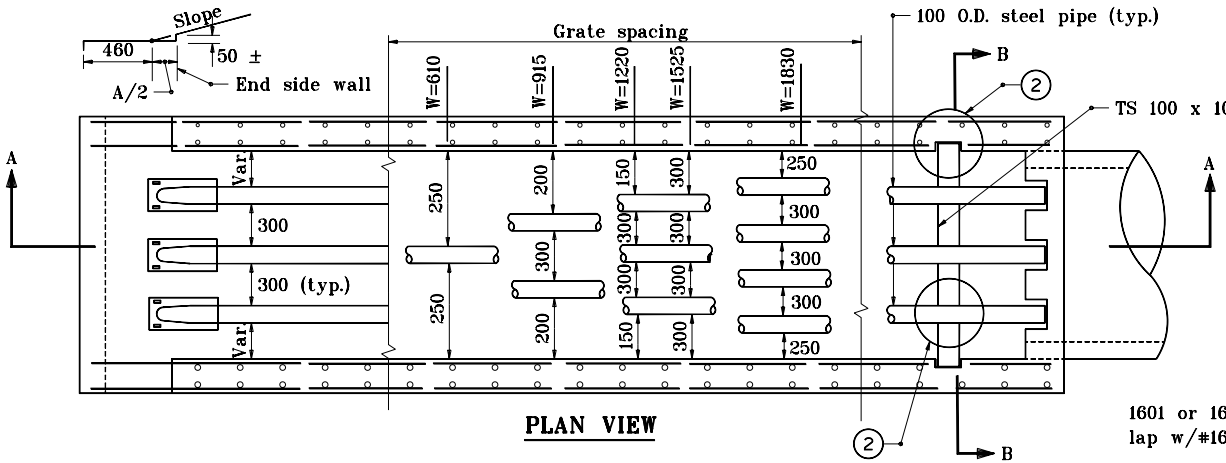

PLAN VIEW

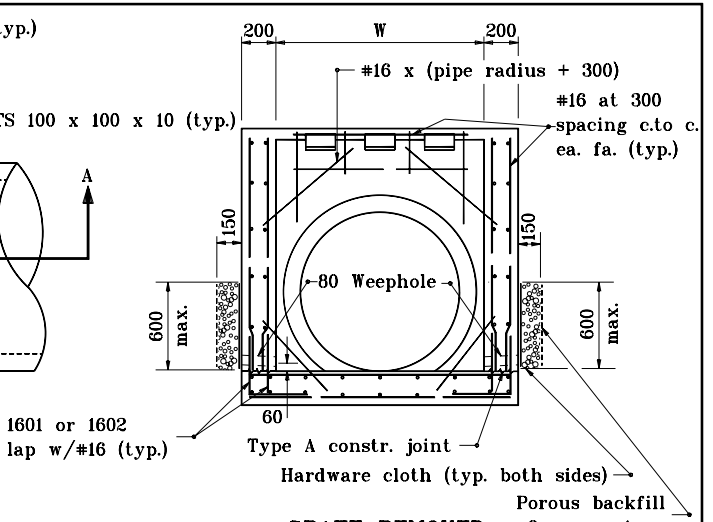

GRATE REMOVED
SECTION B-B

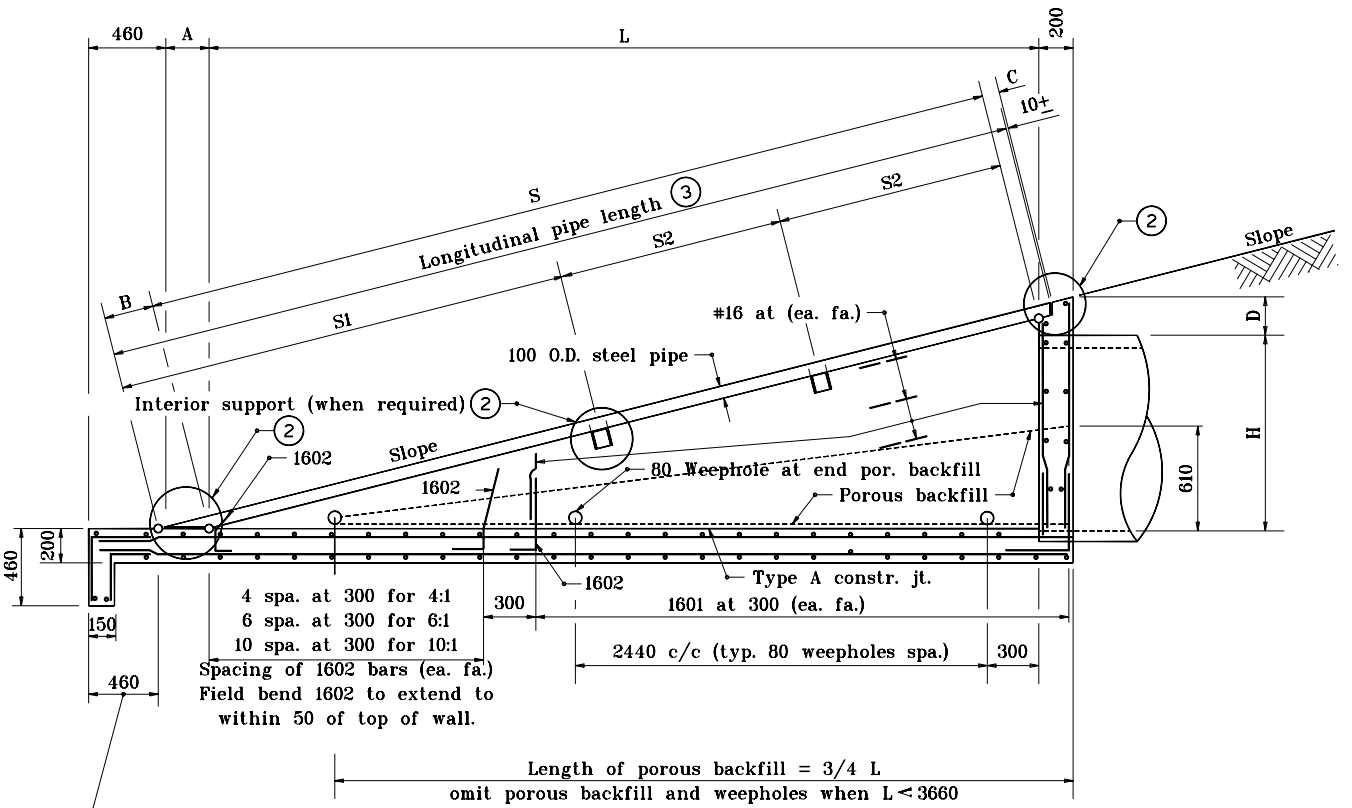

SECTION A-A

GENERAL NOTES

1. The invert grade of the grated box end section shall be the same as that of the pipe.
2. See Standard Drawing 715-GBTO-04 for Details A, B, C, and D.
3. See Standard Drawings 715-GBTO-05 through -08 for tables.
4. Type I grated box end section shall be used for mainline cross-culverts, outlet pipes within the clear zone.
5. See Standard Drawing 715-GBTO-02 for bending diagrams.

All dimensions are in mm unless otherwise specified.

INDIANA DEPARTMENT OF TRANSPORTATION

GRATED BOX END SECTION TYPE I

JANUARY 1999

STANDARD DRAWING NO. **715-GBTO-01**

ANTHONY L. UREMOVICH REGISTERED No. 18095 STATE OF INDIANA PROFESSIONAL ENGINEER

/s/ Anthony L. Uremovich 1-04-99
DESIGN STANDARDS ENGINEER DATE

/s/ Donald W. Lucas 1-04-99
CHIEF HIGHWAY ENGINEER DATE

DESIGN STANDARDS ENGINEER

Source Sheet: GBES 1