## Top and sides of structure

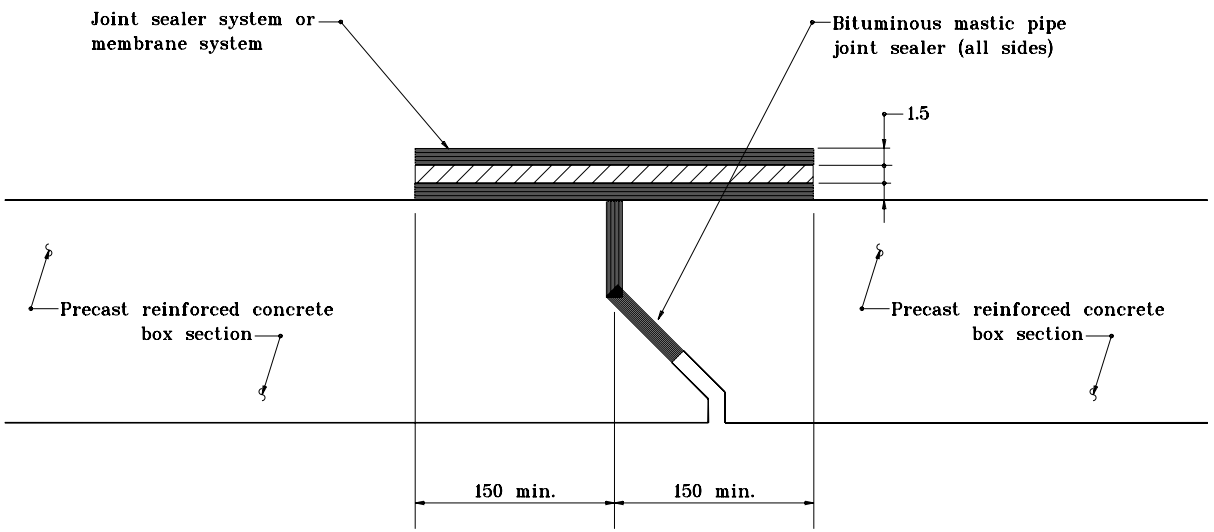


## Inside of structure

All dimensions are in mm unless otherwise specified.

INDIANA DEPARTMENT OF TRANSPORTATION

**PRECAST REINFORCED CONCRETE BOX SECTION JOINT**

MAY 1999

STANDARD DRAWING NO. **714-BCJT-01**

ANTHONY L. UREMOVICH REGISTERED No. 18095 STATE OF INDIANA PROFESSIONAL ENGINEER

DESIGN STANDARDS ENGINEER

/s/ Anthony L. Uremovich 5-03-99
DESIGN STANDARDS ENGINEER DATE

/s/ Donald W. Lucas 5-03-99
CHIEF HIGHWAY ENGINEER DATE

**Source Sheet:**