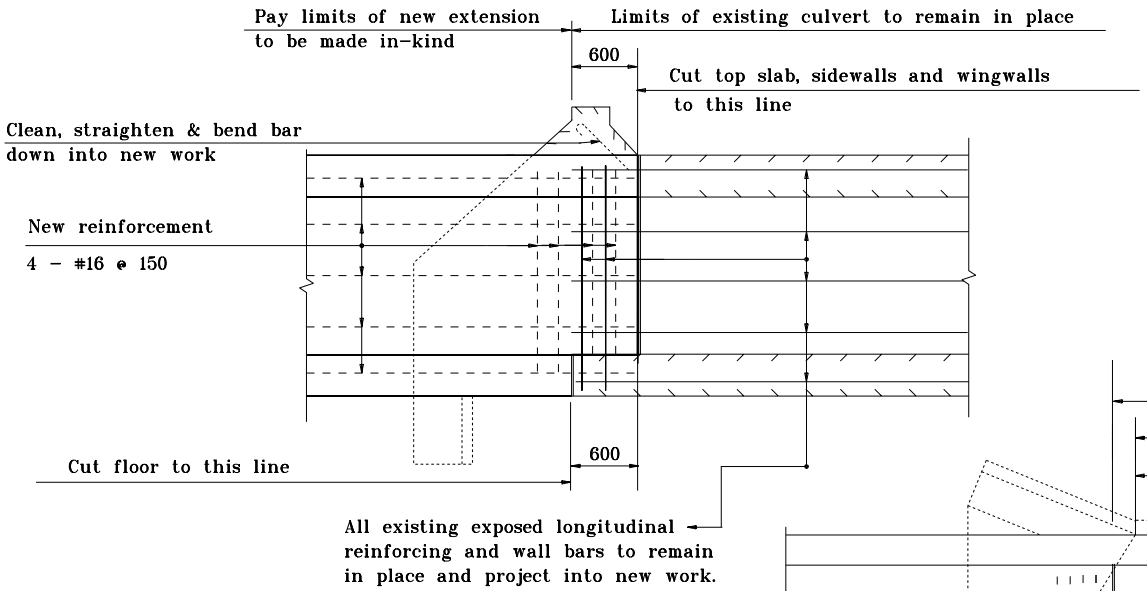

LONGITUDINAL SECTION FOR ALL CULVERTS

NOTES:

1. Before removing any existing concrete, saw around the perimeter of the removal areas on the interior and exterior of the culvert at a depth of 25 mm.

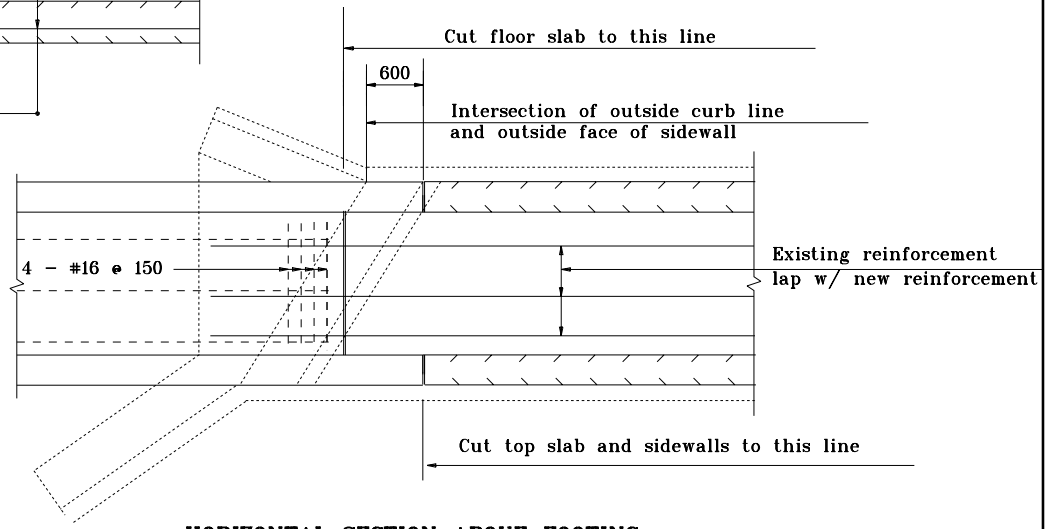

HORIZONTAL SECTION ABOVE FOOTING FOR SKEWED CULVERTS

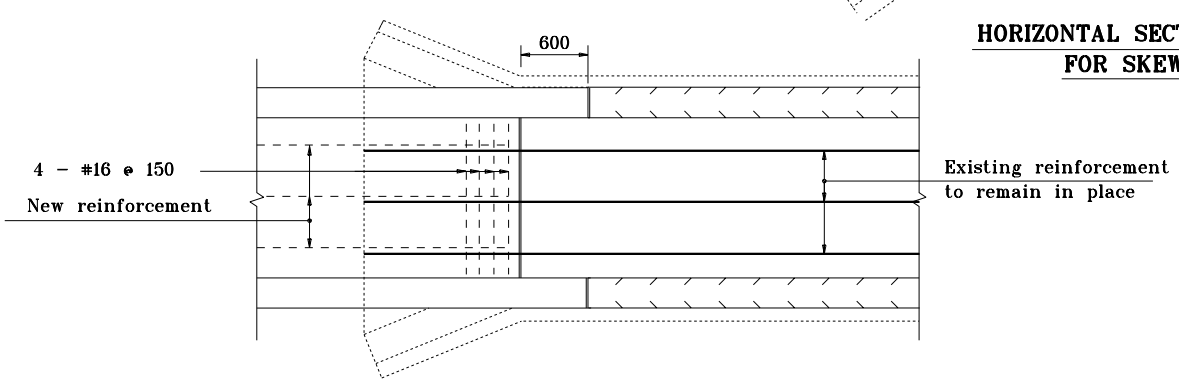

HORIZONTAL SECTION ABOVE FOOTING FOR SQUARE CULVERTS

All dimensions are in mm unless otherwise specified.

INDIANA DEPARTMENT OF TRANSPORTATION

EXTENSION IN-KIND FOR BOX CULVERT

JANUARY 1998

STANDARD DRAWING NO. **714-BCEX-02**

ANTHONY L. UREMOVICH REGISTERED No. 18095 STATE OF INDIANA PROFESSIONAL ENGINEER

/s/ Anthony L. Uremovich 1-02-98
DESIGN STANDARDS ENGINEER DATE

/s/ Donald W. Lucas 1-02-98
CHIEF HIGHWAY ENGINEER DATE

DESIGN STANDARDS ENGINEER

Source Sheet: MU