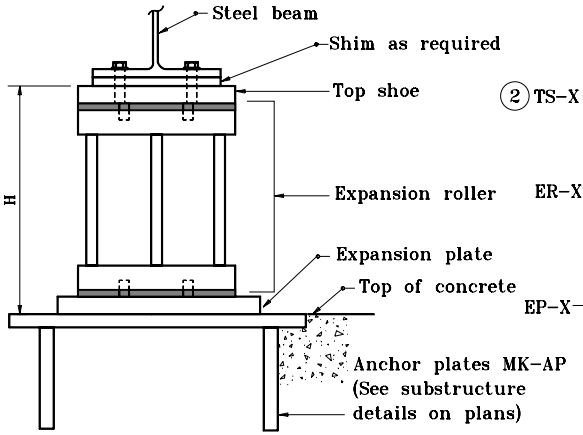

EXPANSION SHOE ASSEMBLY

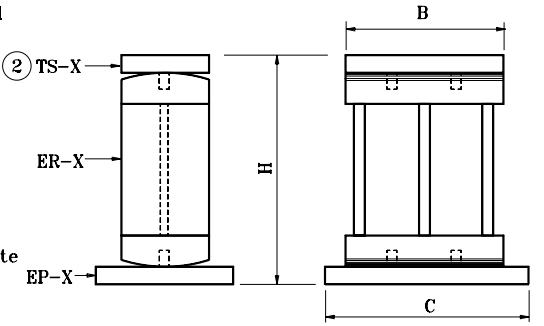

EXPANSION SHOE

TABLE OF SHOE ASSEMBLY

Shoe Type	Maximum Reaction	Shoe Assembly			H
		TS-X	ER-X	EP-X	
E-1	423 kN	TS-1	ER-1	EP-1	470
E-2	685 kN	TS-2	ER-2	EP-2	480
E-3	1068 kN	TS-3	ER-3	EP-3	400
E-4	609 kN	TS-4	ER-4	EP-4	470
E-5	890 kN	TS-5	ER-5	EP-5	480
E-6	1334 kN	TS-6	ER-6	EP-6	400

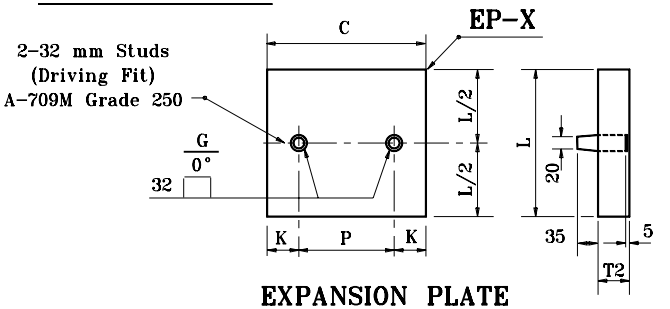

EXPANSION PLATE

NOTES :

1. Curved surfaces of shoes to be machined after weldments have been completed. At the contractor's option the following substitutions of materials will be allowed at no increase in unit price of material.

a). A-709M Grade 345W steel may be used in lieu of A-709M Grade 250 steel.

b). A-709M Grade 690 steel may be used in lieu of A-709M Grade 345W or A-709M Grade 250 steels.

2 Top shoe TS-X details are shown on Standard Drawing 711-BSTS-01.

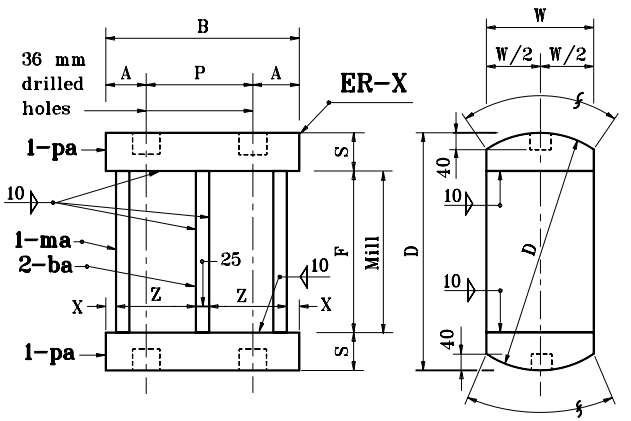

EXPANSION ROLLER

EP-X	C	L	T2	K	P	Section	Material
EP-1	400	230	45	105	190	PL 230 x 45	A-709M Grade 250
EP-2	400	250	50	115	170	PL 250 x 50	A-709M Grade 345W
EP-3	400	380	50	120	160	PL 380 x 50	A-709M Grade 690
EP-4	500	230	45	125	250	PL 230 x 45	A-709M Grade 250
EP-5	500	250	50	130	240	PL 250 x 50	A-709M Grade 345W
EP-6	500	380	50	140	220	PL 380 x 50	A-709M Grade 690

ER-X	B	W	D	S	F	A	P	X	Z	Sections			Note
										ma	ba	pa	
ER-1	300	200	380	60	260	55	190	12.5±	125±	W 250 x 131	Bar 90 X 25	PL 200 x 60	A-709M Grade 250
ER-2	300	200	380	60	260	65	170	12.5±	125±	W 250 x 131	Bar 90 X 25	PL 200 x 60	A-709M Grade 345W
ER-3	300	150	300	45	210	70	160	12.5±	125±	W 250 x 131	Bar 65 X 25	PL 150 x 50	A-709M Grade 690
ER-4	400	200	380	60	260	75	250	15±	175±	W 360 x 196	Bar 90 X 25	PL 200 x 60	A-709M Grade 250
ER-5	400	200	380	60	260	80	240	15±	175±	W 360 x 196	Bar 90 X 25	PL 200 x 60	A-709M Grade 345W
ER-6	400	150	300	45	210	90	220	15±	175±	W 360 x 196	Bar 65 X 25	PL 150 x 50	A-709M Grade 690

All dimensions are in mm unless otherwise specified.

INDIANA DEPARTMENT OF TRANSPORTATION

EXPANSION STEEL SHOE DETAILS

JANUARY 2001

STANDARD DRAWING NO. **711-BSTS-02**

ANTHONY L. UREMOVICH REGISTERED No. 18095 STATE OF INDIANA PROFESSIONAL ENGINEER

DESIGN STANDARDS ENGINEER

/s/ Anthony L. Uremovich 1-02-01
DESIGN STANDARDS ENGINEER DATE

/s/ Dorothy Zaluckas 1-02-01
CHIEF HIGHWAY ENGINEER DATE