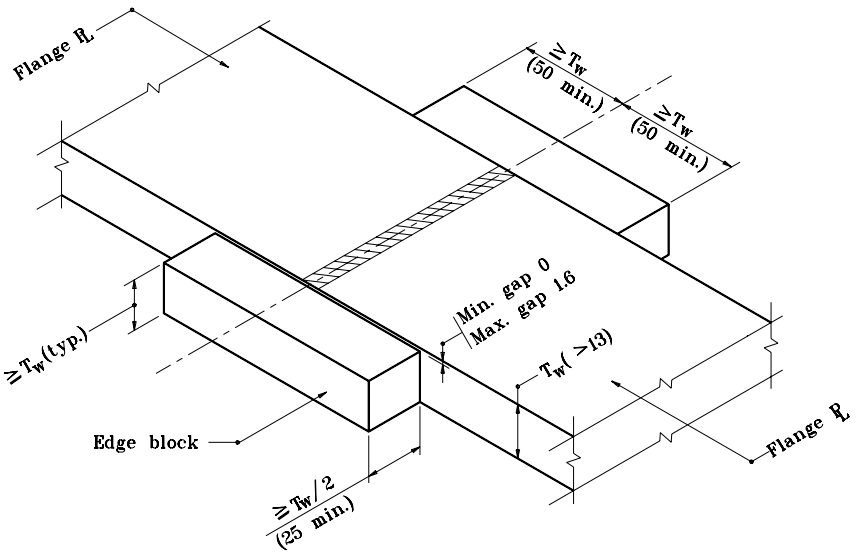

CONSTANT PLATE SIZE ACROSS JOINT

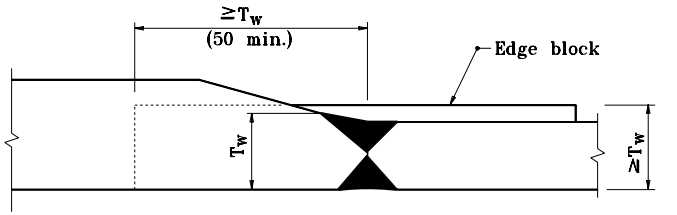

THICKNESS TRANSITION

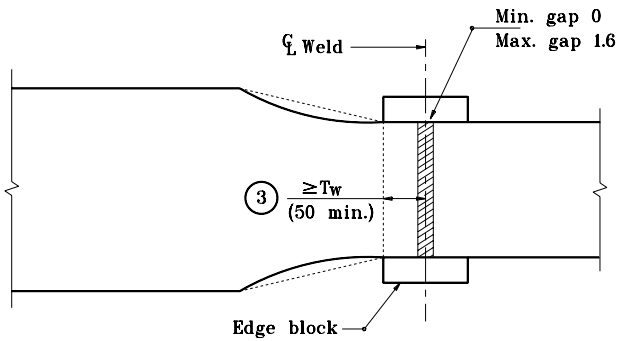

WIDTH TRANSITION

NOTES :

1. This drawing shows the fabrication methods used in structural steel plates not having rolled edges.

2. Edge blocks shall be used when radiographing flange butt shop welds of greater than 13 mm thickness. Edge block shall not be tack welded.

3. The transition may start beyond the edge block.

4. T_W = Maximum weld thickness at joint.

All dimensions are in mm unless otherwise specified.

INDIANA DEPARTMENT OF TRANSPORTATION

STEEL STRUCTURES

PLACEMENT OF RADIOGRAPHIC EDGE BLOCKS

MAY 2000

STANDARD DRAWING NO. **711-BREB-01**

ANTHONY L. UREMOVICH REGISTERED No. 18095 STATE OF INDIANA PROFESSIONAL ENGINEER

DESIGN STANDARDS ENGINEER

/s/ Anthony L. Uremovich 5-01-00
DESIGN STANDARDS ENGINEER DATE

/s/ Firooz Zandi 5-01-00
CHIEF HIGHWAY ENGINEER DATE