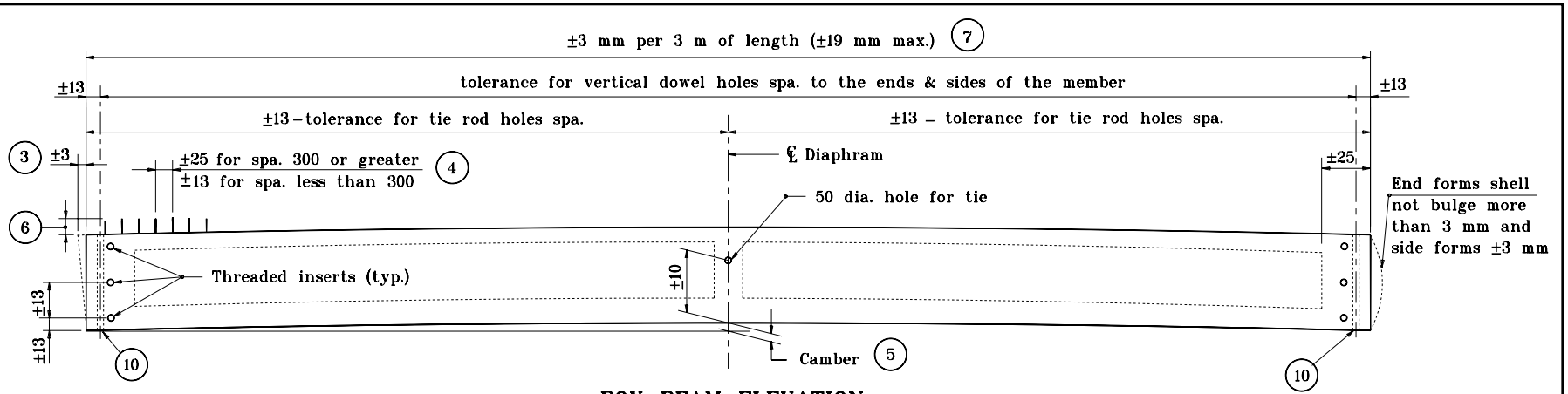

BOX BEAM ELEVATION

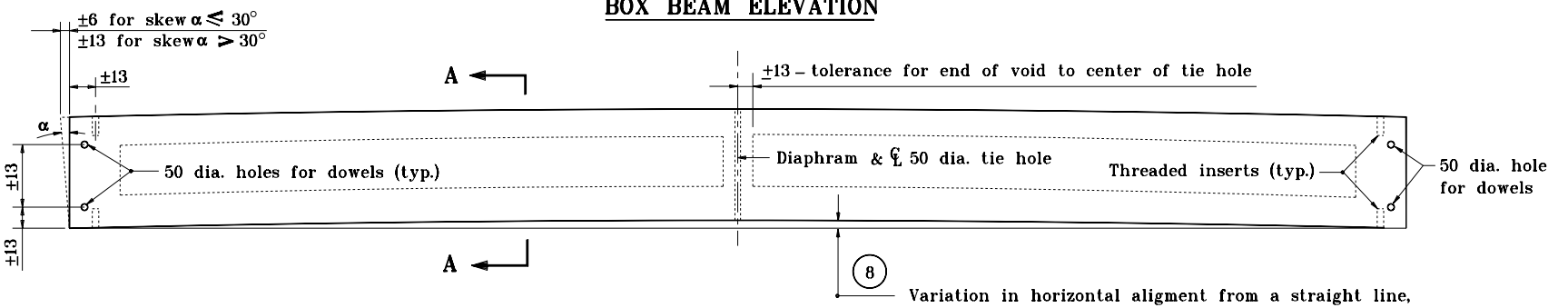

BOX BEAM PLAN

Variation in horizontal aligment from a straight line, end to end of beam and parallel to centerline of beam shall be: ±6 mm up to 12 m beam lengths, ±10 mm for 12 m to 18 m beam lengths, ±13 mm for above 18 m lengths.

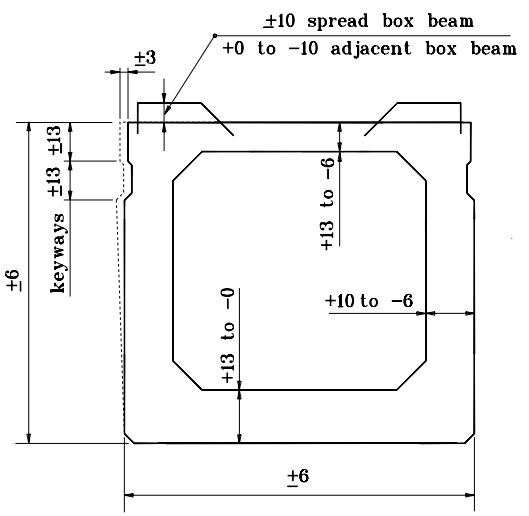

SECTION A–A

NOTES :

1. For General Notes see Standard Drawing 707–BPBF–03.
2. The top surface of box beam shall not vary more than 3 mm in 3 m as measured from a straightedge.

(3) Tolerance of beam ends for deviation from a true vertical with respect to top and bottom surfaces.

(4) Tolerances for reinforcing bars for composite beam.

(6) Projection above top of spread box beam shall be ± 10 mm. Projection above top of adjacent box beam + 0 to −10 mm.

All dimensions are in mm unless otherwise specified.

INDIANA DEPARTMENT OF TRANSPORTATION

FABRICATION TOLERACES PRESTRESSED BOX BEAM

MAY 2000

STANDARD DRAWING NO. **707–BPBF–01**

ANTHONY L. UREMOVICH REGISTERED No. 18095 STATE OF INDIANA PROFESSIONAL ENGINEER

DESIGN STANDARDS ENGINEER

/s/ Anthony L. Uremovich 5–01–00
DESIGN STANDARDS ENGINEER DATE

/s/ Firooz Zandi 5–01–00
CHIEF HIGHWAY ENGINEER DATE