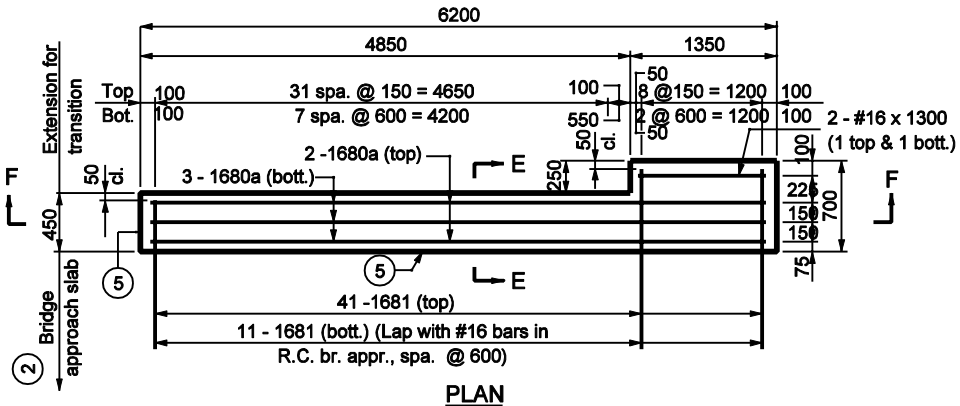

PLAN

NOTES:

1. See Standard Drawing 706-TASE-05 for General Notes.

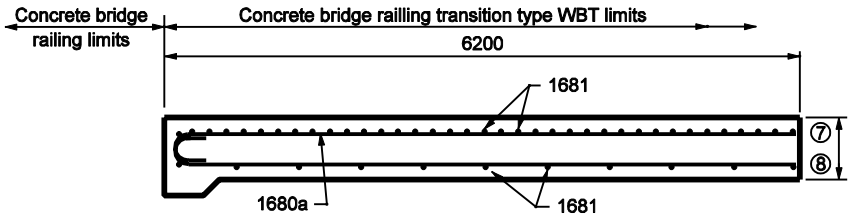

SECTION F-F

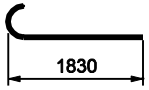

1681 x 2020

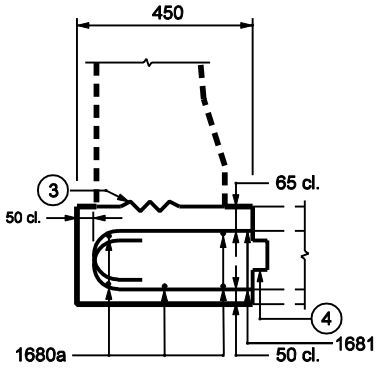

SECTION E-E

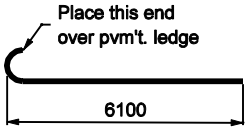

1680a x 6280

BILL OF MATERIALS			
These quantities are for one approach slab extension.			
EPOXY COATED REINFORCING STEEL			
Size & type	No. of Bars	Length	Weight (lb)
1680a	5	6280	
1681	52	2020	
#16	2	1300	
Total #16 Bars			216
Total Epoxy Coated Steel			216
MISCELLANEOUS			
250 R.C. Pvmt.			3.1m.^{2}

All Dimension are in mm unless otherwise specfied

INDIANA DEPARTMENT OF TRANSPORTATION

BRIDGE RAILING TRANSITION
WBT SLAB EXTENSION

SEPTEMBER 2002

STANDARD DRAWING NO. 706-TASE-04

RICHARD L. VanCLEAVE REGISTERED No. 9750 STATE OF INDIANA PROFESSIONAL ENGINEER

DESIGN STANDARDS ENGINEER

/s/ Richard L. VanCleave 9-03-02
DESIGN STANDARDS ENGINEER DATE

/s/ Richard K. Smulzer 9-03-02
CHIEF HIGHWAY ENGINEER DATE