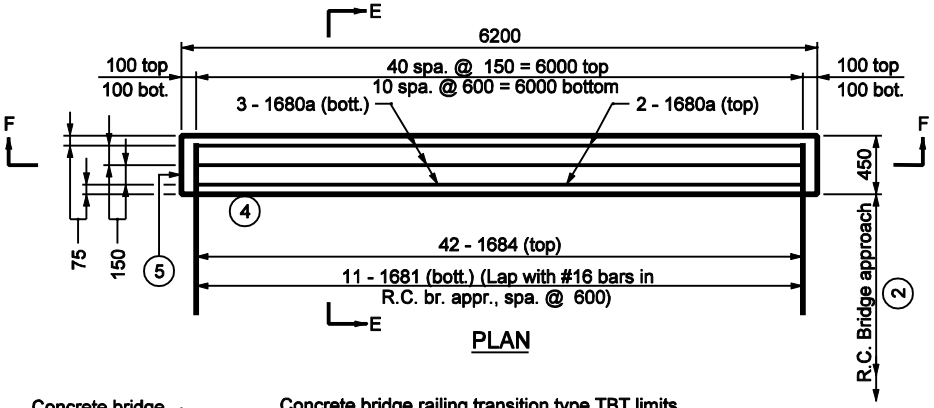

PLAN

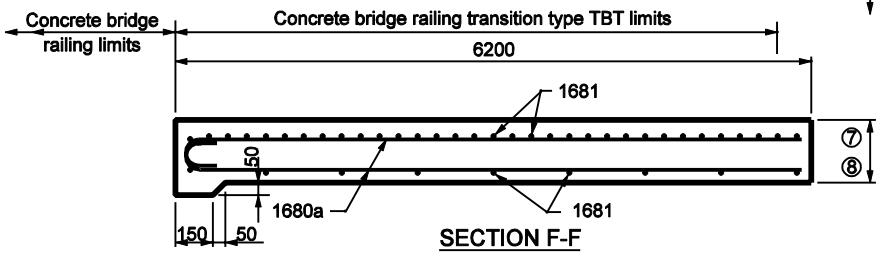

SECTION F-F

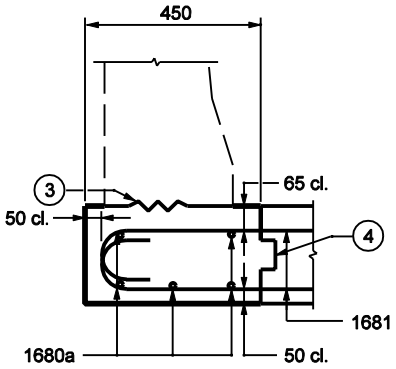

SECTION E-E

BILL OF MATERIALS			
These quantities are for one side Approach Slab Extension.			
EPOXY COATED REINFORCING STEEL			
Size & Mark	No. of Bars	Length (ft.)	Weight (lb)
1680a	5	6280	
1681	52	2020	
Total #16 Bars			212
Total Epoxy Coated Steel			212
MISCELLANEOUS			
R.C. Br. Appr., 10"			2.6 m

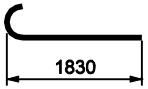

1681 x 2020

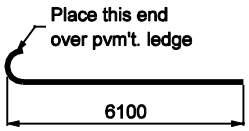

1680a x 6280

APPROACH SLAB EXTENSION DETAILS

NOTES:

1. See Standard Drawing 706-TTBT-01 through -03 for concrete bridge railing transition type TBT details.
2. See Standard Drawing 706-TASE-05 for General Notes.

All Dimension are in mm unless otherwise specfied

INDIANA DEPARTMENT OF TRANSPORTATION

BRIDGE RAILING TRANSITION
TBT SLAB EXTENSION

SEPTEMBER 2002

STANDARD DRAWING NO. 706-TASE-02

RICHARD L. VanCLEAVE REGISTERED No. 9750 STATE OF INDIANA PROFESSIONAL ENGINEER

DESIGN STANDARDS ENGINEER

/s/ Richard L. VanCleave 9-03-02
DESIGN STANDARDS ENGINEER DATE

/s/ Richard K. Smulzer 9-03-02
CHIEF HIGHWAY ENGINEER DATE