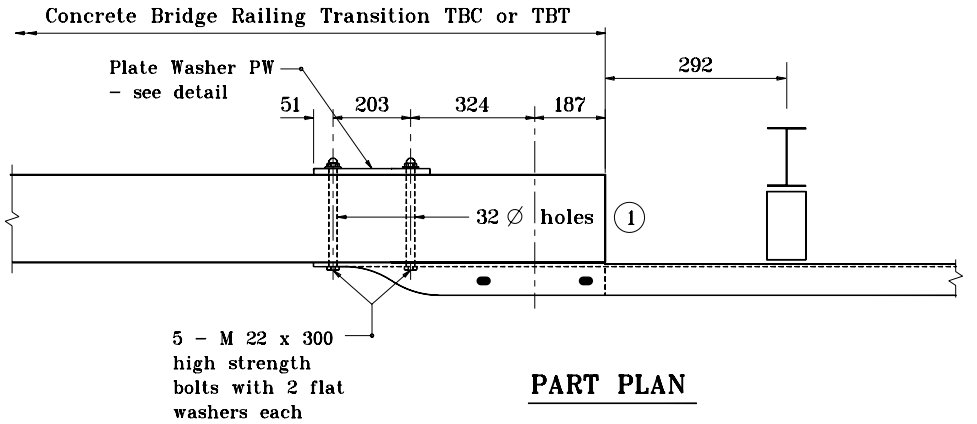


## PART PLAN

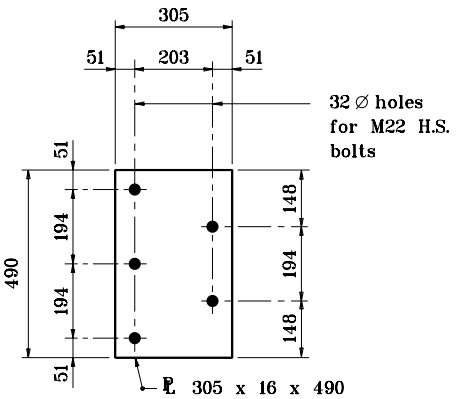


## PLATE WASHER PW

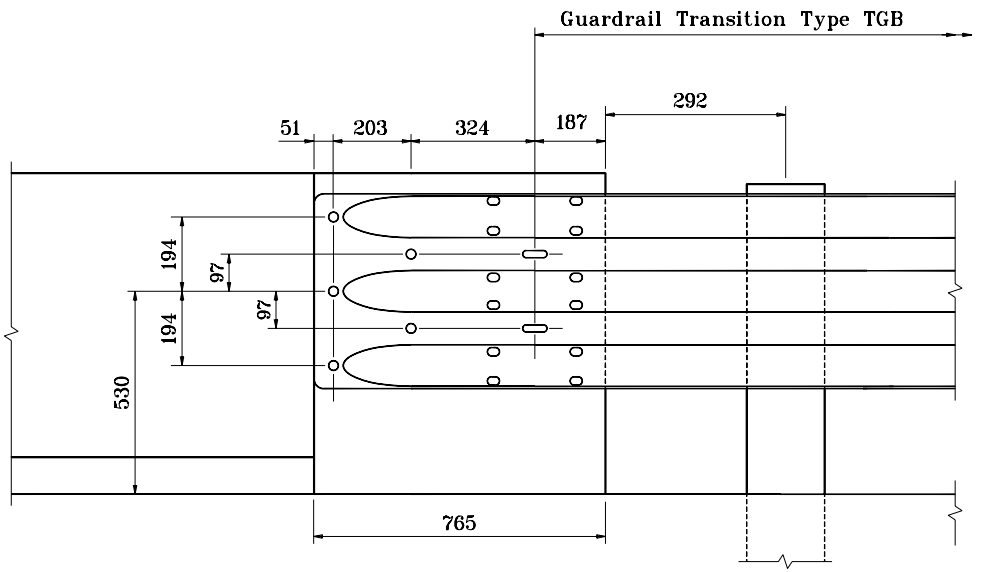


## PART ELEVATION

## NOTES:

1. These holes, required for the connection of the guardrail transition type TGB to the end of the concrete bridge railing transition, shall be preformed.

2. This drawing shall be used in conjuction with bridge railing type TBC as shown on Standard Drawing 706-TTBC-01, or type TBT as shown on 706-TTBT-01 and Guardrail transition type as shown on Stanard Drawing 601-TTBC-01.

All dimensions are in mm unless otherwise specified.

| | |
|---|---|
| INDIANA DEPARTMENT OF TRANSPORTATION | |
| BRIDGE RAILING TRANSITION TBC OR TBT<br>ATTACHMENT OF GUARDRAIL<br>MAY 2000 | |
| STANDARD DRAWING NO. **706-CBRT-02** | |
| ANTHONY L. UREMOVICH REGISTERED No. 18095 STATE OF INDIANA PROFESSIONAL ENGINEER<br>DESIGN STANDARDS ENGINEER | /s/ Anthony L. Uremovich 5-01-00<br>DESIGN STANDARDS ENGINEER DATE<br>/s/ Firooz Zandi 5-01-00<br>CHIEF HIGHWAY ENGINEER DATE |