NOTES:

1. See Standard Drawing 703-BRST-01 for standard 180° bar bending details.
2. All reinforcing bars designated "E" shall be epoxy coated.

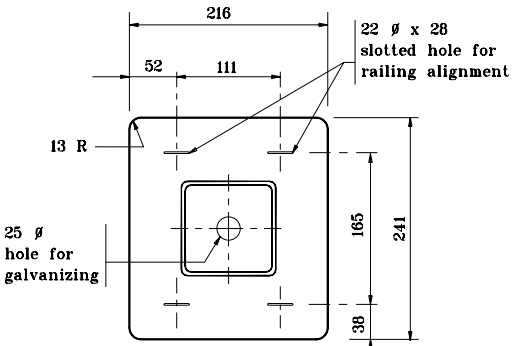

BASE PLATE DETAIL

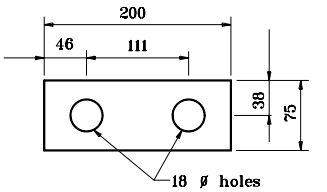

BEARING PLATE DETAIL

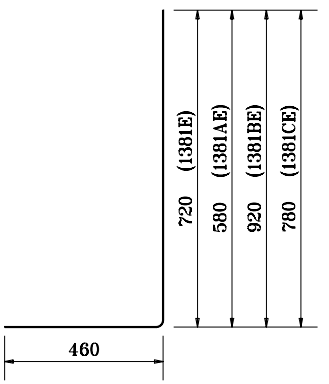

1381E x 1180
1381AE x 1040
1381BE x 1380
1381CE x 1240

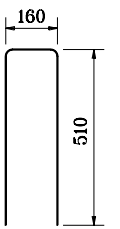

1382E x 1180

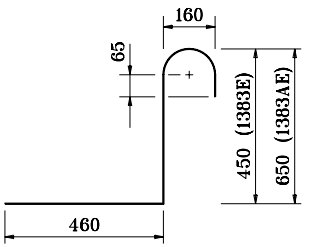

1383E x 1160
1383AE x 1360

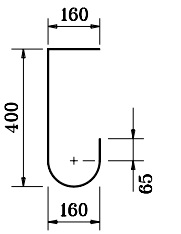

1384E x 800

All dimensions are in mm unless otherwise specified.

INDIANA DEPARTMENT OF TRANSPORTATION

RAILING, PF & PS DETAILS

MARCH 2002

STANDARD DRAWING NO. **706-BRPP-06**

RICHARD L. VanCLEAVE REGISTERED No. 9750 STATE OF INDIANA PROFESSIONAL ENGINEER

DESIGN STANDARDS ENGINEER

/s/ Richard L. VanCleave — DESIGN STANDARDS ENGINEER — 3-01-02 DATE

/s/ Richard K. Smutzer — CHIEF HIGHWAY ENGINEER — 3-01-02 DATE