GENERAL NOTES

1. For attaching pipe to all drains, use M10x40 hex bolts with 2-M10 lock washers and 2-M10 nuts. (All parts galvanized)

2. The approximate weight of the drain is 54.4 kg.

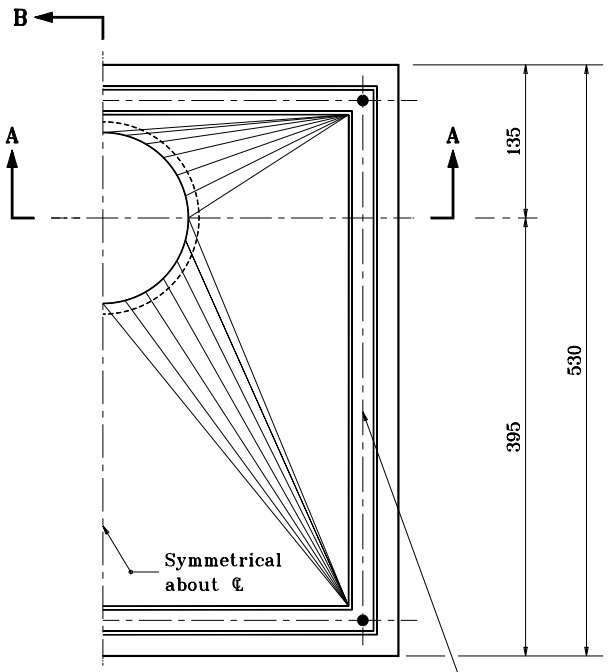

HALF PLAN

Tapped holes for M8 screws

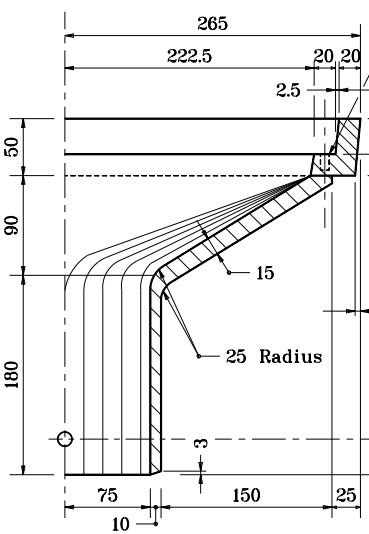

HALF SECTION A-A

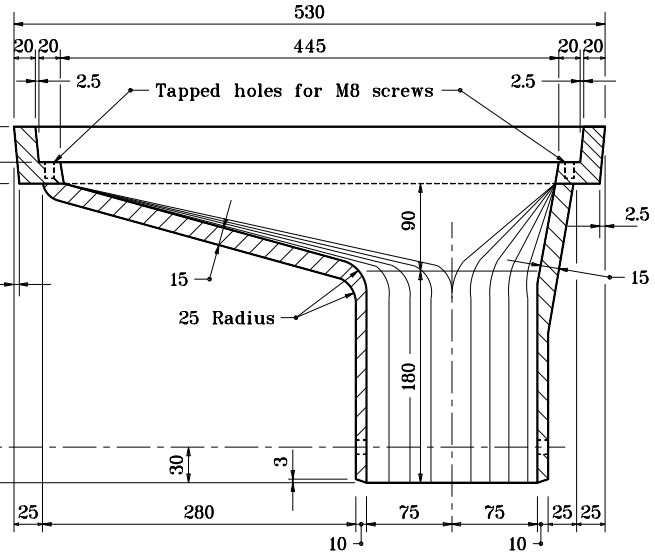

SECTION B-B

All dimensions are in mm unless otherwise specified.

INDIANA DEPARTMENT OF TRANSPORTATION

CASTING DETAILS
ROADWAY DRAIN TYPE SQ

SEPTEMBER 1994

STANDARD DRAWING NO. **704-BDCG-04**

ANTHONY L. UREMOVICH REGISTERED No. 18095 STATE OF INDIANA PROFESSIONAL ENGINEER

DESIGN STANDARDS ENGINEER

/s/ Anthony L. Uremovich 9-30-94
DESIGN STANDARDS ENGINEER DATE

/s/ Donald W. Lucas 9-30-94
CHIEF HIGHWAY ENGINEER DATE

Source Sheet: D