PROCEDURE FOR SPLICING PARTIALLY DRIVEN PILING

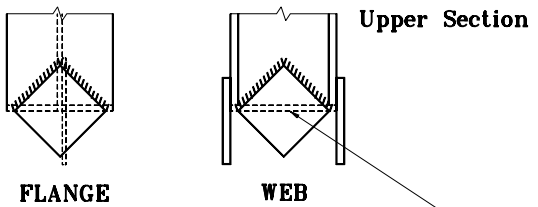

Prepare inside of both flanges one side of web, and weld on splice plates.

a.) Hold upper section in place with pile line, then plumb pile.

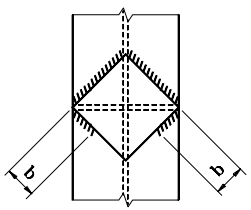

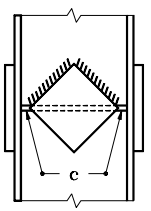

b.) Weld fillet for 50 on each outside corner of flange plates.

c.) Weld prepared butt joint for 40 at each end of the web.

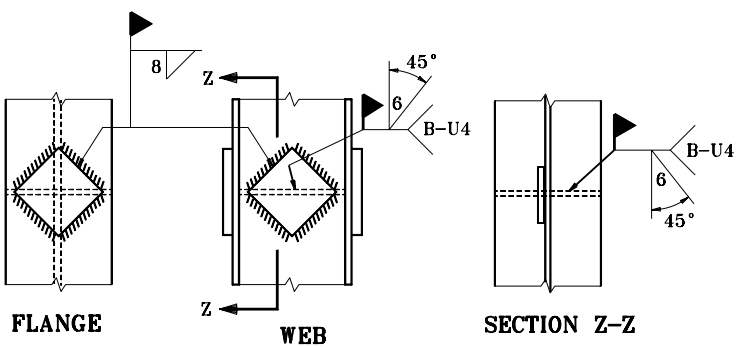

COMPLETED SPLICE

d.) Remove pile line and complete all welds.

NOTE :

PROCEDURE FOR SPLICING PILING BEFORE DRIVING

Steel H piling may be spliced in a horizontal position prior to driving using splice plates and web and flange penetration welds as shown below. The welding sequence need not be followed provided the piling remains straight after welding.

SPLICE PLATE DIMENSIONS & PLACEMENT

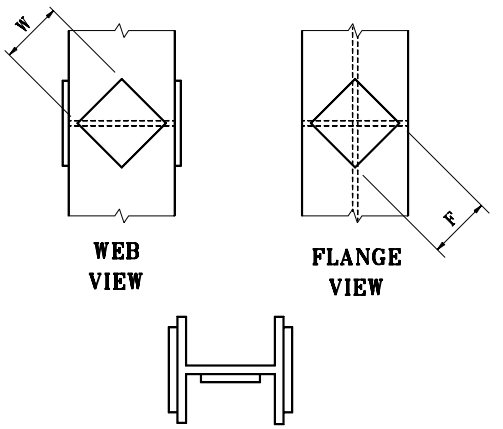

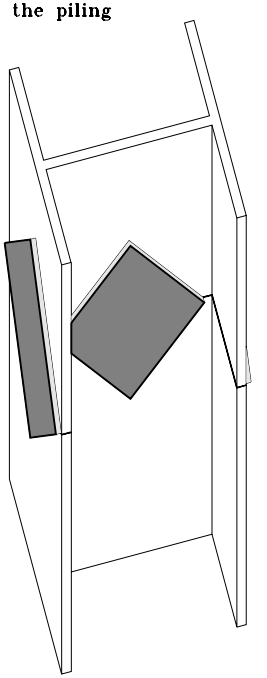

COMPLETED SPLICE ISOMETRIC

Use 10 mm thick square plates & 8 mm fillet welds

H–PILE SIZE	HP 250	HP 310	HP 360
FLANGE	180	210	260
WEB	140	170	200

All dimensions are in mm unless otherwise specified.

INDIANA DEPARTMENT OF TRANSPORTATION

STEEL H–PILE SPLICE PROCEDURE

MAY 1998

STANDARD DRAWING NO. **701–BPIL–05**

ANTHONY L. UREMOVICH REGISTERED No. 18095 STATE OF INDIANA PROFESSIONAL ENGINEER

/s/ Anthony L. Uremovich 5–01–98
DESIGN STANDARDS ENGINEER DATE

/s/ Donald W. Lucas 5–01–98
CHIEF HIGHWAY ENGINEER DATE

DESIGN STANDARDS ENGINEER

Source Sheet: C–1