GENERAL NOTES:

1. See Standard Drawing 720-INST-09 for inlet type P-12 details.
2. Contours and top of weir elevation shown in Section B-B are are relative to the ditch grade.

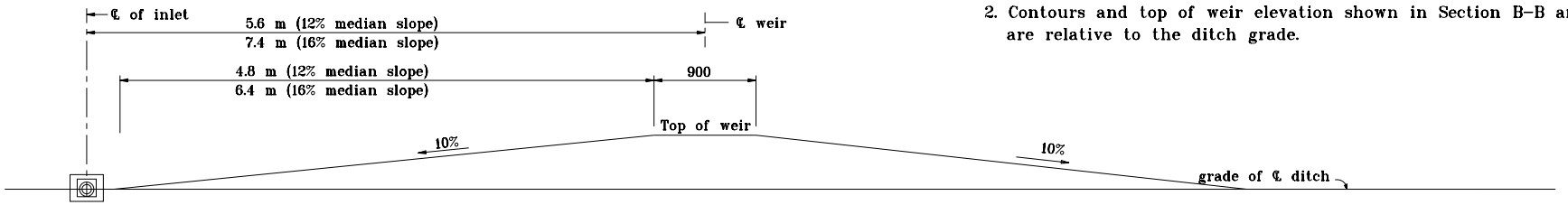

SECTION B-B

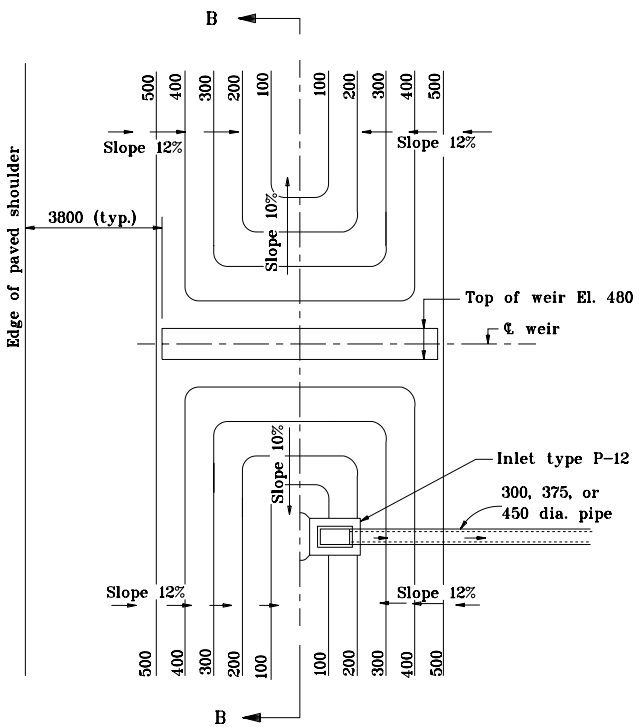

PLAN

12% MEDIAN SLOPE

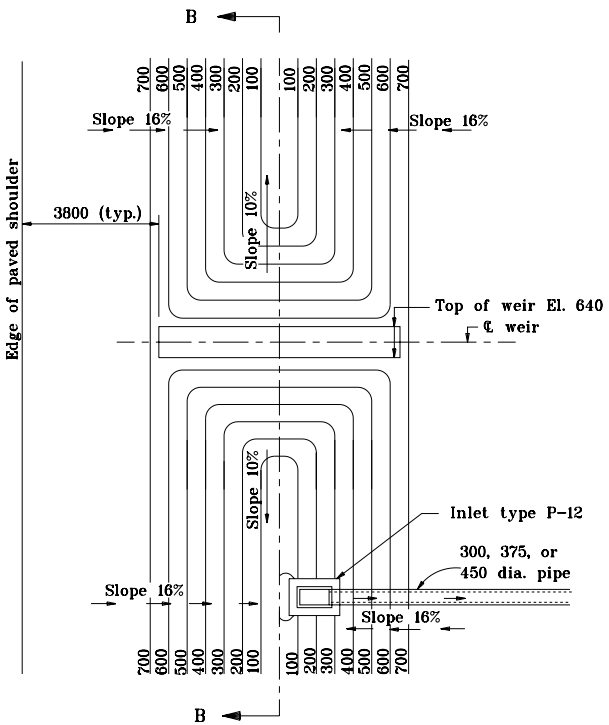

PLAN

16% MEDIAN SLOPE

All dimensions are in mm unless otherwise specified.

INDIANA DEPARTMENT OF TRANSPORTATION

CENTER DITCH INLET PERPENDICULAR TO ℄ ROADWAY

MAY 1998

STANDARD DRAWING NO. **617-CDIN-03**

ANTHONY L. UREMOVICH REGISTERED No. 18095 STATE OF INDIANA PROFESSIONAL ENGINEER

DESIGN STANDARDS ENGINEER

/s/ Anthony L. Uremovich 5-01-98
DESIGN STANDARDS ENGINEER DATE

/s/ Donald W. Lucas 5-01-98
CHIEF HIGHWAY ENGINEER DATE

Source Sheet: MS1