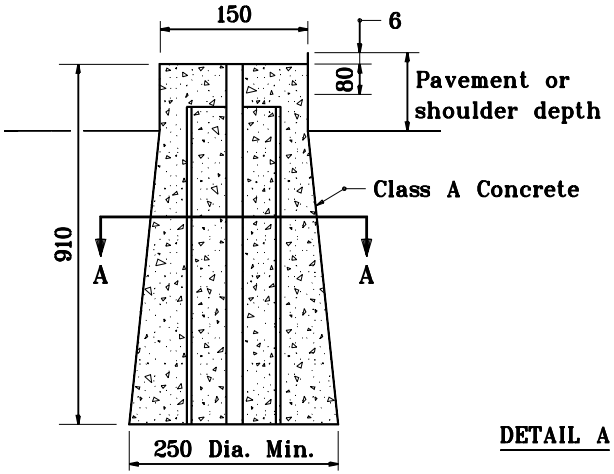

DETAIL A

INSIDE PAVEMENT OR SHOULDER AREA

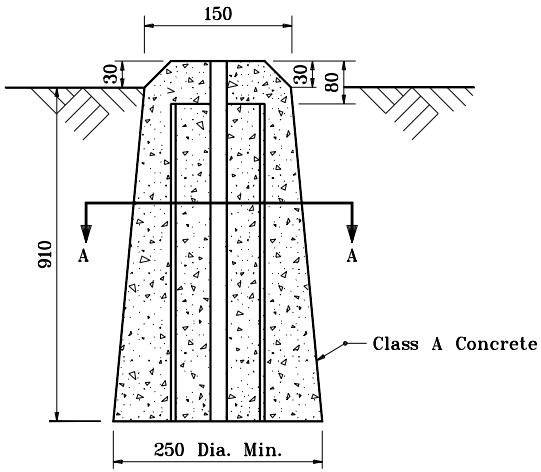

OUTSIDE PAVEMENT OR SHOULDER AREA

NEW SECTION CORNER MONUMENT INSTALLATION

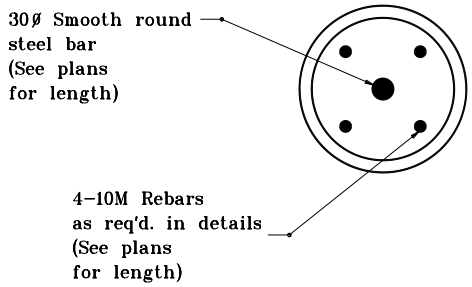

SECTION A-A

NOTES

1. If the existing section corner monument is 0 to 300 below surface, it shall be removed and replaced as shown in Detail A.

2. If the existing section corner monument is 310 to 910 below surface, the county surveyor shall determine whether it shall remain in place or be replaced. If the monument is to be replaced, the installation shall be as shown in Detail A. If the existing monument is to remain in place, it shall be extended as shown in Detail A.

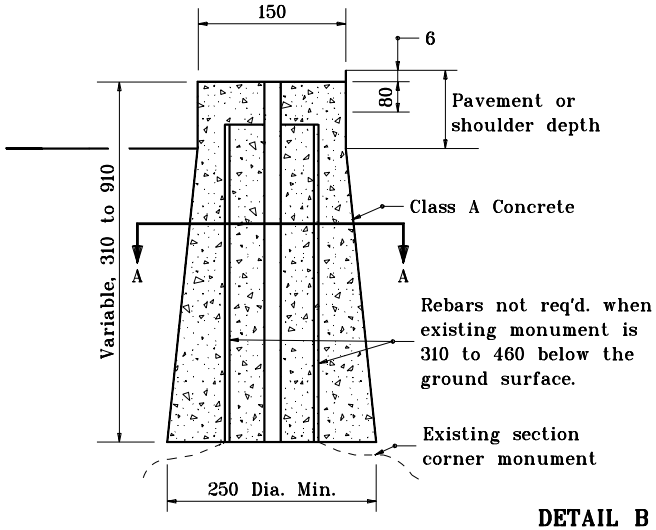

DETAIL B

INSIDE PAVEMENT OR SHOULDER AREA

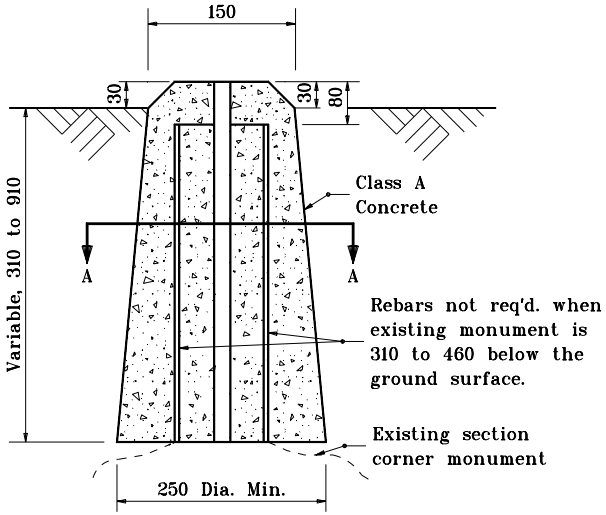

OUTSIDE PAVEMENT OR SHOULDER AREA

EXTENSION OF EXISTING SECTION CORNER MONUMENT

All dimensions are in mm unless otherwise specified.

INDIANA DEPARTMENT OF TRANSPORTATION

SECTION CORNER MONUMENTS

APRIL 1995

STANDARD DRAWING NO. **615-SCMN-01**

ANTHONY L. UREMOVICH REGISTERED No. 18095 STATE OF INDIANA PROFESSIONAL ENGINEER

/s/ Anthony L. Uremovich 4-03-95
DESIGN STANDARDS ENGINEER DATE

/s/ Donald W. Lucas 4-03-95
CHIEF HIGHWAY ENGINEER DATE

DESIGN STANDARDS ENGINEER

Source Sheet: MA