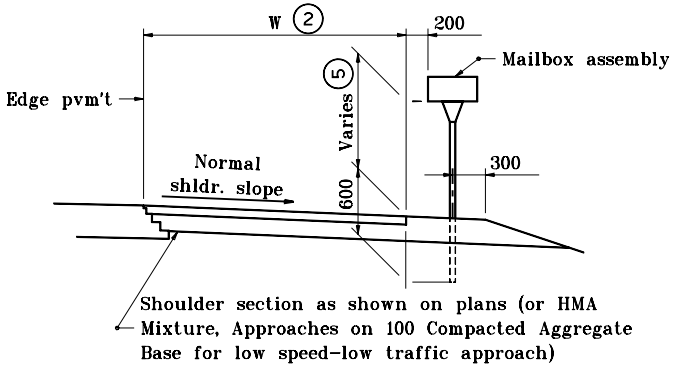

NORMAL SHOULDER SECTION

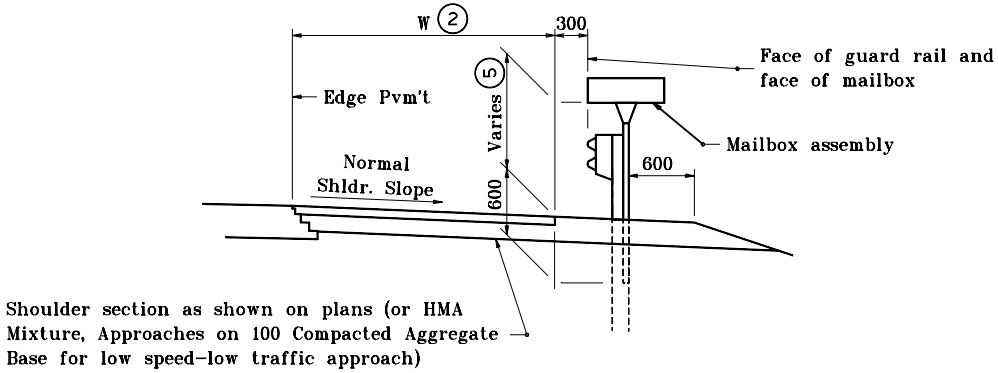

SHOULDER SECTION WITH GUARD RAIL

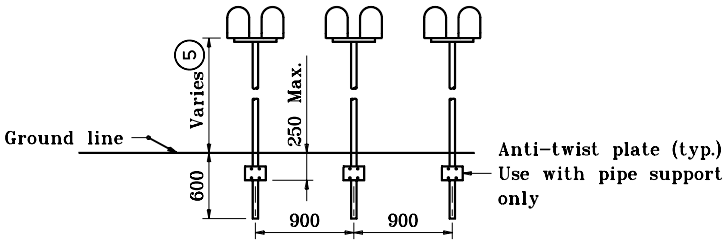

SPACING FOR MULTIPLE POST INSTALLATION

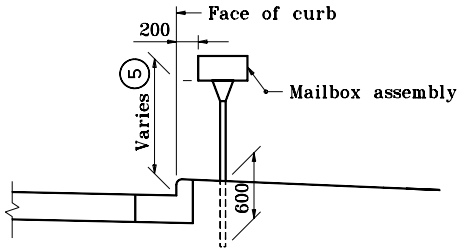

CURBED SECTION

GENERAL NOTES

(2) W = Minimum width of mailbox approach at mailbox.
W = 2500 Minimum for 20 years projected A.D.T. less than 1500.
W = 3000 Minimum for 20 year projected A.D.T. equal to or greater than 1500.

3. The low speed-low traffic mailbox approach and combination approach and drive will be permitted only on local and collector roads with a design speed of 65 km/h or less and with a 20 year projected A.D.T. of fewer than 400 V.P.D.

(5) The normal height range is 1070 to 1220. Contact the local postmaster to establish appropriate installation height

All dimensions are in mm unless otherwise specified.

INDIANA DEPARTMENT OF TRANSPORTATION

ELEVATION VIEWS

JANUARY 2000

STANDARD DRAWING NO. **611-MBAS-04**

ANTHONY L. UREMOVICH REGISTERED No. 18095 STATE OF INDIANA PROFESSIONAL ENGINEER

DESIGN STANDARDS ENGINEER

/s/ Anthony L. Uremovich 1-03-00
DESIGN STANDARDS ENGINEER DATE

/s/ Firooz Zandi 1-03-00
CHIEF HIGHWAY ENGINEER DATE