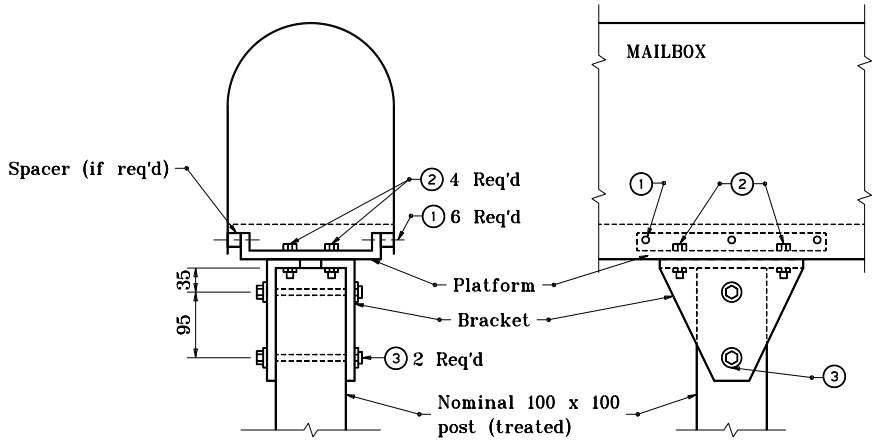


## WITH WOOD POST

Details above platform same as shown above with wood post.

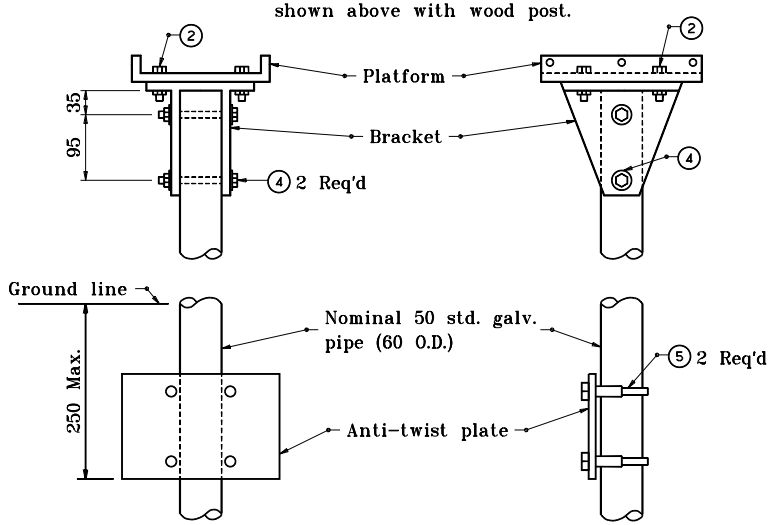


## WITH PIPE POST

## LEGEND

1. M4 x "L" truss head machine screw with 2 M4 flat washers, M4 lock washers, and M4 hex nut.
2. M10 x 20 hex cap screw with 2 M10 flat washers, M10 lock washer and M10 hex nut.
3. M10 x 120 hex cap screw with 2 M10 flat washers, M10 lock washer, and M10 hex nut.
4. M10 x 80 hex cap screw with 2 M10 flat washers, M10 lock washer, and M10 hex nut.
5. Nominal 60 muffler clamp

All dimensions are in mm unless otherwise specified.

INDIANA DEPARTMENT OF TRANSPORTATION

# SINGLE MAILBOX ASSEMBLY

APRIL 1995

STANDARD DRAWING NO. **611-MBAS-01**

ANTHONY L. UREMOVICH REGISTERED No. 18095 STATE OF INDIANA PROFESSIONAL ENGINEER

DESIGN STANDARDS ENGINEER

/s/ Anthony L. Uremovich 4-03-95
DESIGN STANDARDS ENGINEER DATE

/s/ Donald W. Lucas 4-03-95
CHIEF HIGHWAY ENGINEER DATE

Source Sheet: MH3