GENERAL NOTES

1. See Standard Drawing 610-RCBA-04 for reinforcement details.

(2) Subbase for PCCP shall only be used when underdrains are specified or existing.

(3) Terminal joint elevation shall match elevation of adjacent panels.

(4) Depth d_{AS} must equal d_{MP}. However, if d_{MP} is less than 300, d_{AS} must be 300.

(5) Limits of polyethylene bond breaker.

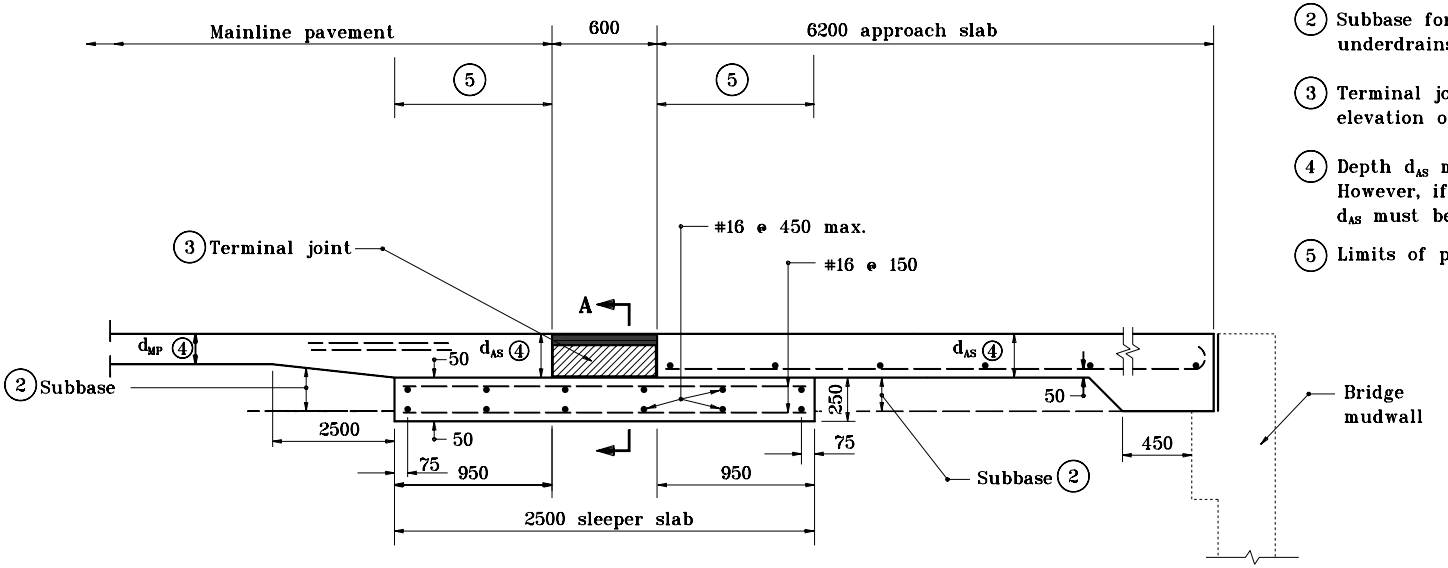

TERMINAL JOINT FOR REINFORCED PCCP AT BRIDGE STRUCTURE

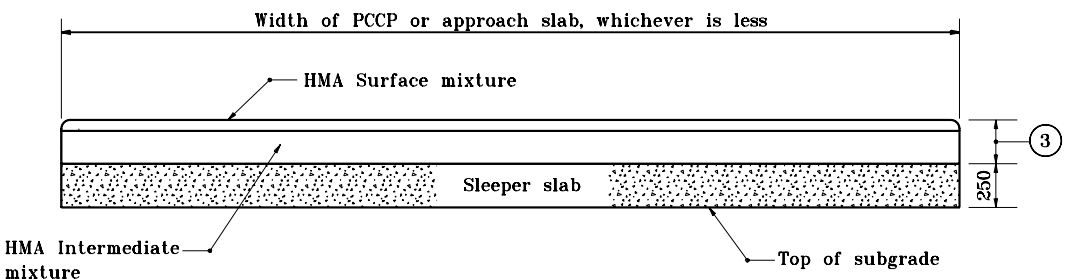

SECTION A-A

All dimensions are in mm unless otherwise specified.

INDIANA DEPARTMENT OF TRANSPORTATION

BRIDGE APPROACH SLAB AND TERMINAL JOINT

MARCH 2002

STANDARD DRAWING NO. **610-RCBA-02**

RICHARD L. VanCLEAVE REGISTERED No. 9750 STATE OF INDIANA PROFESSIONAL ENGINEER

DESIGN STANDARDS ENGINEER

/s/ Richard L. VanCleave 3-01-02
DESIGN STANDARDS ENGINEER DATE

/s/ Richard K. Smutzer 3-01-02
CHIEF HIGHWAY ENGINEER DATE