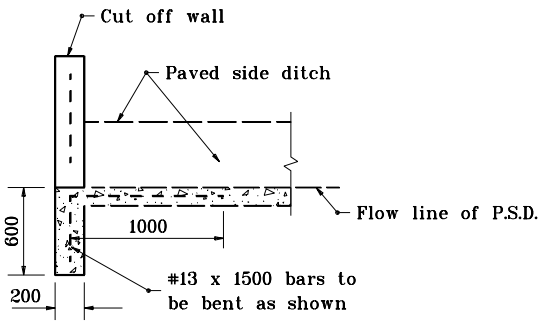

SECTION A–A

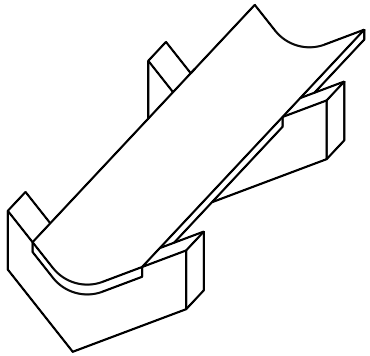

ISOMETRIC VIEW

PAVED SIDE DITCH TYPE A THROUGH D

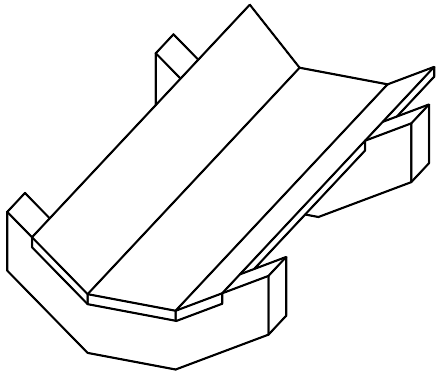

ISOMETRIC VIEW

PAVED SIDE DITCH TYPES J THROUGH M

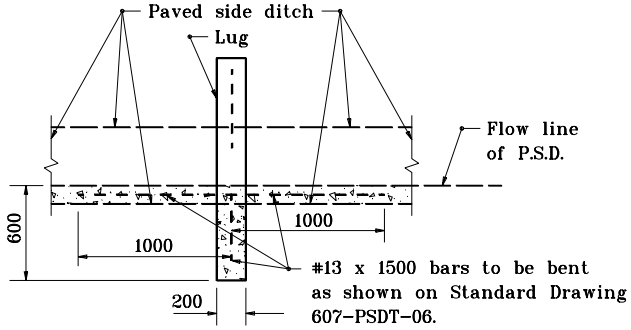

SECTION B–B

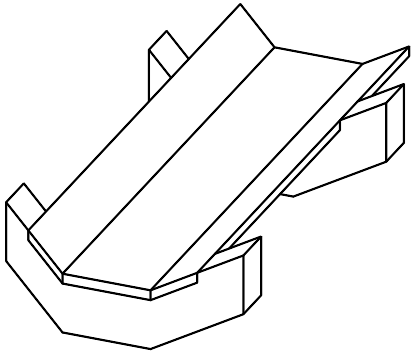

ISOMETRIC VIEW

PAVED SIDE DITCH TYPE E THROUGH H

All dimensions are in mm unless otherwise specified.

INDIANA DEPARTMENT OF TRANSPORTATION

PAVED SIDE DITCH
SECTIONS AND ISOMETRICS

SEPTEMBER 1997

STANDARD DRAWING NO. **607–PSDT–02**

ANTHONY L. UREMOVICH REGISTERED No. 18095 STATE OF INDIANA PROFESSIONAL ENGINEER

DESIGN STANDARDS ENGINEER

/s/ Anthony L. Uremovich 9–01–97
DESIGN STANDARDS ENGINEER DATE

/s/ Donald W. Lucas 9–01–97
CHIEF HIGHWAY ENGINEER DATE

Source Sheet: MB