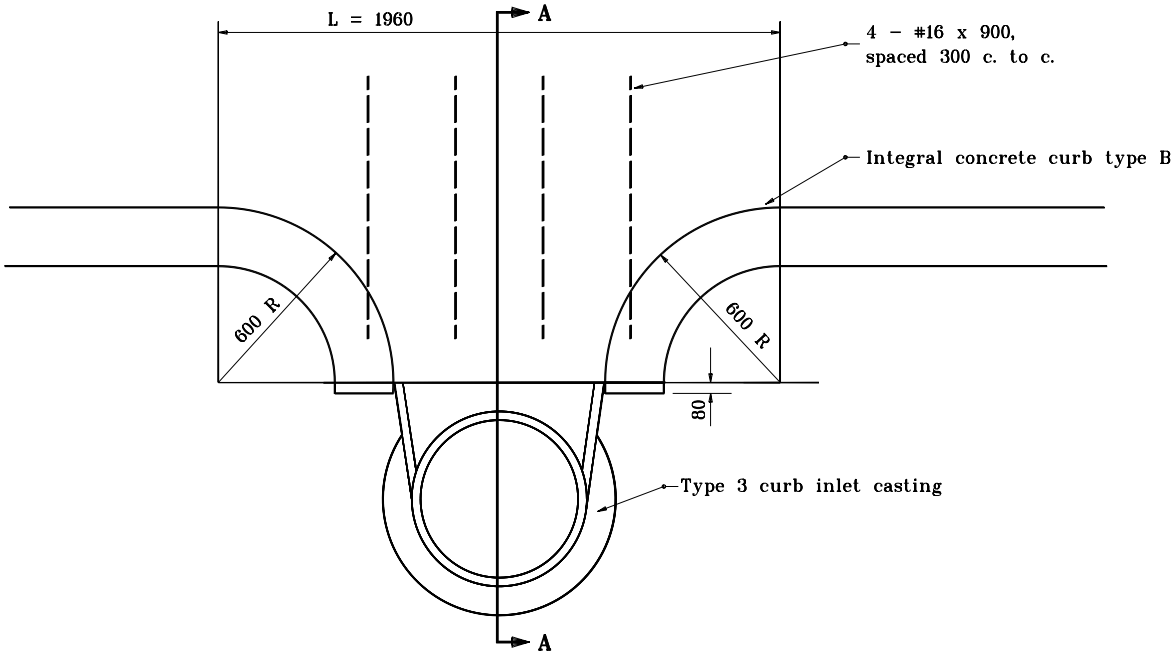

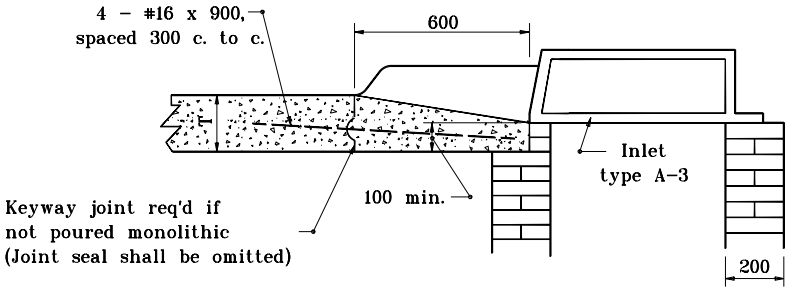

SECTION A–A

GENERAL NOTES

1. See Standard Drawing 501–CCPJ–08 for keyway joint details.

All dimensions are in mm unless otherwise specified.

INDIANA DEPARTMENT OF TRANSPORTATION

CURB TURNOUT TO A–3 INLET

SEPTEMBER 1997

STANDARD DRAWING NO. **605–CTIN–01**

ANTHONY L. UREMOVICH REGISTERED No. 18095 STATE OF INDIANA PROFESSIONAL ENGINEER

DESIGN STANDARDS ENGINEER

/s/ Anthony L. Uremovich 9–01–97
DESIGN STANDARDS ENGINEER DATE

/s/ Donald W. Lucas 9–01–97
CHIEF HIGHWAY ENGINEER DATE

Source Sheet: MB1