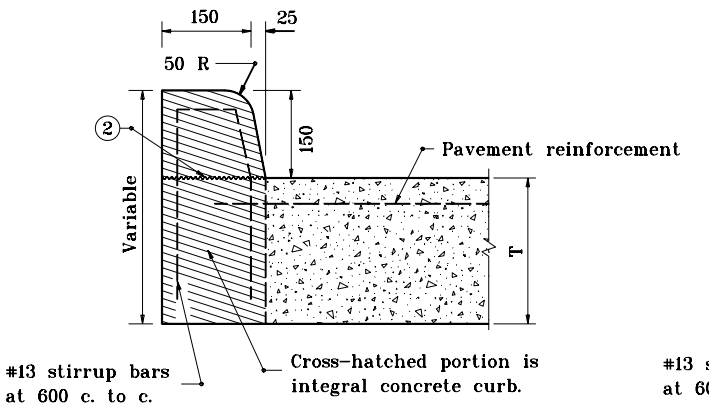

INTEGRAL CONCRETE CURB
(BARRIER)

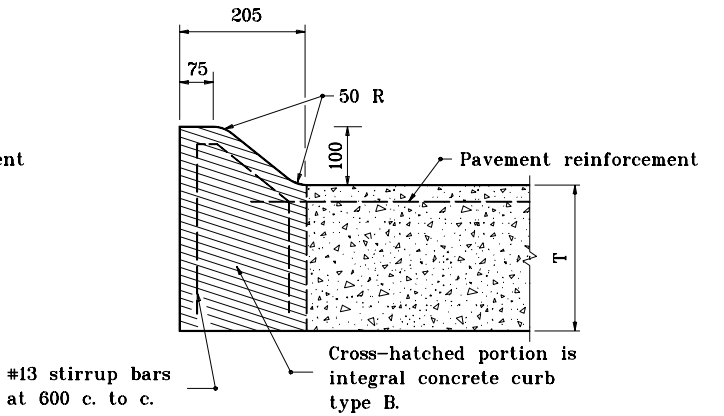

INTEGRAL CONCRETE CURB
TYPE B
(MOUNTABLE)

GENERAL NOTES

1. 205 for integral concrete curb type B or C and 175 for integral concrete curb.
2. Concrete below this line may be poured with the pavement.

LEGEND

T = Nominal pavement thickness

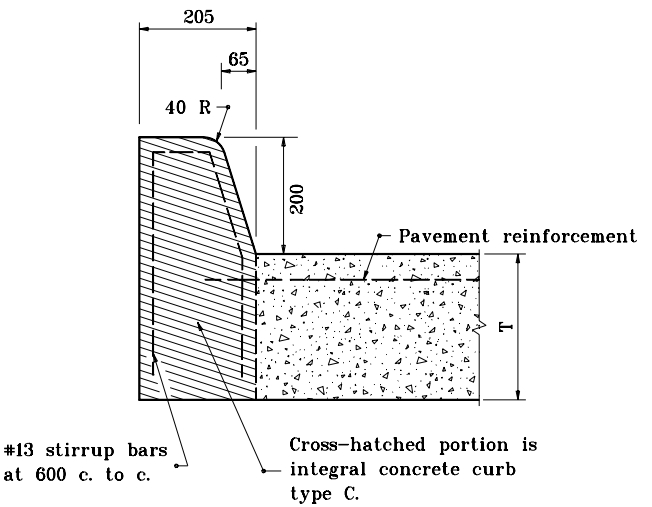

INTEGRAL CONCRETE CURB
TYPE C
(BARRIER)

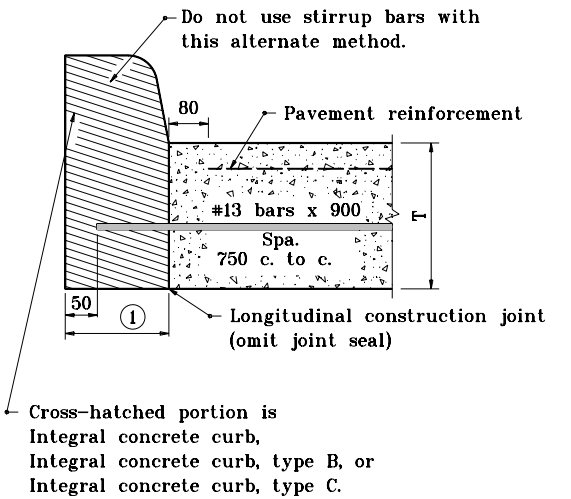

ALTERNATE METHOD
OF CONSTRUCTION FOR ALL TYPES
OF INTEGRAL CONCRETE CURB

All dimensions are in mm unless otherwise specified.

INDIANA DEPARTMENT OF TRANSPORTATION

INTEGRAL CONCRETE CURB

MARCH 2002

STANDARD DRAWING NO. **605-CCIN-01**

RICHARD L. VanCLEAVE REGISTERED No. 9750 STATE OF INDIANA PROFESSIONAL ENGINEER

DESIGN STANDARDS ENGINEER

/s/ Richard L. VanCleave 3-01-02
DESIGN STANDARDS ENGINEER DATE

/s/ Richard K. Smutzer 3-01-02
CHIEF HIGHWAY ENGINEER DATE