GENERAL NOTES

1. This installation to be made only where directed. Barbed wire will not be required at points where such installation would cause the collecting of drift in the channel.

2. Line posts of 2900 or longer for crossing shall be 50 nominal tubing weighing 5.43 kg/m or L80 x 80 x 10 angles and shall be set in concrete footings.

3. Extra length posts to be used as directed.

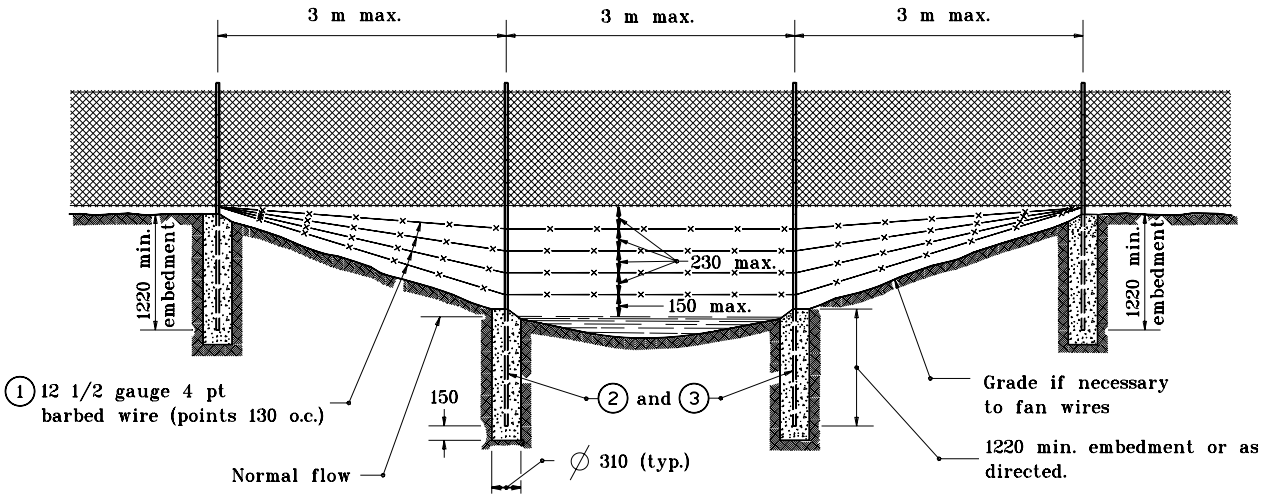

SECTION AT STREAM CROSSING OR DEPRESSION

All dimensions are in mm unless otherwise specified.

INDIANA DEPARTMENT OF TRANSPORTATION

CHAIN LINK TYPE FENCE

JANUARY 2000

STANDARD DRAWING NO. **603-CLTF-02**

ANTHONY L. UREMOVICH REGISTERED No. 18095 STATE OF INDIANA PROFESSIONAL ENGINEER

DESIGN STANDARDS ENGINEER

/s/ Anthony L. Uremovich 1-03-00
DESIGN STANDARDS ENGINEER DATE

/s/ Firooz Zandi 1-03-00
CHIEF HIGHWAY ENGINEER DATE