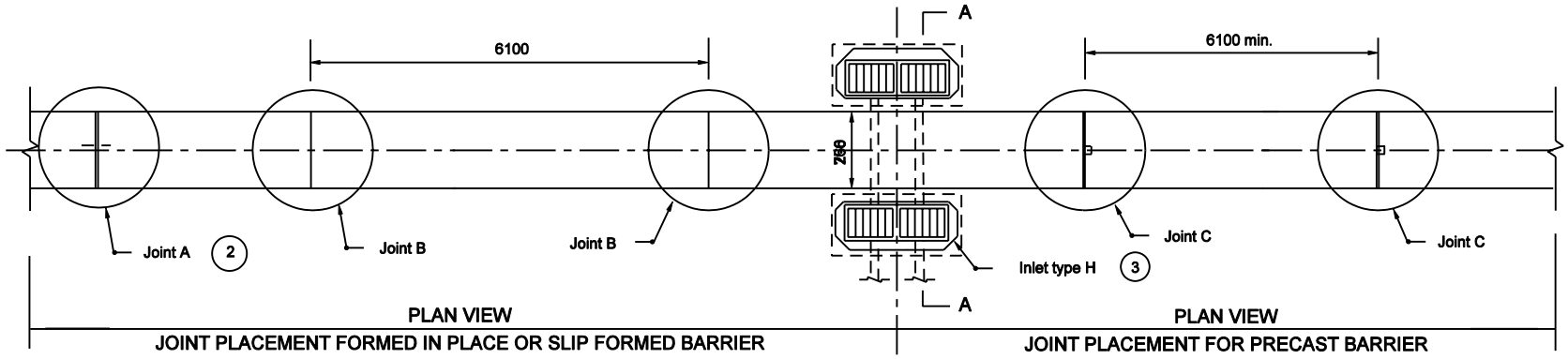

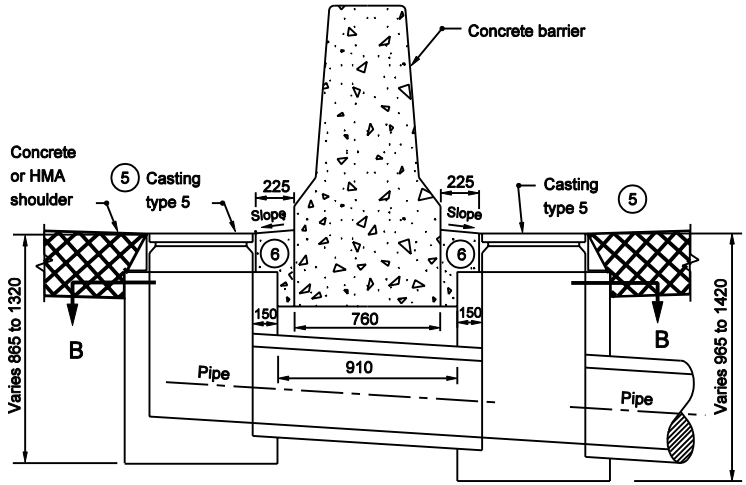

SECTION A-A

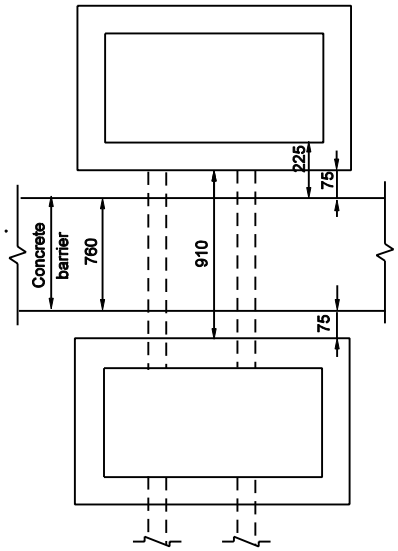

SECTION B-B

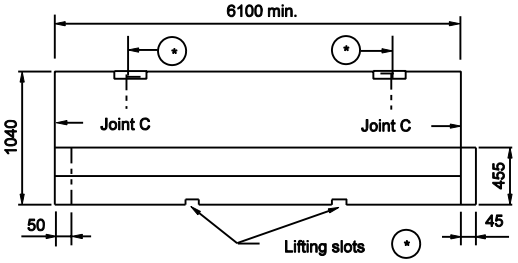

SIDE VIEW OF PRECAST SECTION

(*) Precast concrete barrier shall have threaded inserts cast into the top of each section, a minimum of 6 mm below the surface, and embeded to a depth sufficient for safe lifting of the section.
Lifting slots will be permitted in addition to the inserts. The dimensions and locations of these slots may be adjusted to accomodate variations in handling equipment.

GENERAL NOTES :

1. See Standard Drawing 602-CCMB-02 for joint details.
2. Cast-in-place or slip-formed concrete barrier shall have a joint type A at 3000 mm from each end of a median bridge pier or bent. The maximum spacing between type A joints shall be 120 m. Type A joint shall be placed at the end of each work period pour.
3. Each inlet type H includes two inlet boxes, the connector pipe between the inlet boxes, and two type 5 castings.
4. Type B joint shall be located and spaced as shown.
5. See Standard Drawings 720-ICCA-01 to E 720-ICCA-03 for casting type 5 details.
6. Concrete shoulder or pavement between type 5 casting and concrete barrier wall.
7. See Standard Drawing 720-INST-05B for information regarding inlet indicators.

All Dimension are in mm unless otherwise specfied

INDIANA DEPARTMENT OF TRANSPORTATION

CONCRETE BARRIER DRAIN AND JOINT PLACEMENT

MARCH 2003

STANDARD DRAWING NO. 602-CCMB-01

RICHARD L. VanCLEAVE REGISTERED No. 9750 STATE OF INDIANA PROFESSIONAL ENGINEER

DESIGN STANDARDS ENGINEER

/s/ Richard L. VanCleave 3-03-03
DESIGN STANDARDS ENGINEER DATE

/s/ Richard K. Smutzer 3-03-03
CHIEF HIGHWAY ENGINEER DATE