NOTES:

① These dimensions shall be adjusted as required to accommodate steel post flange.

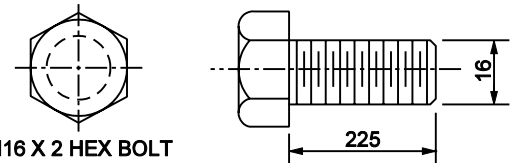

M16 X 2 HEX BOLT

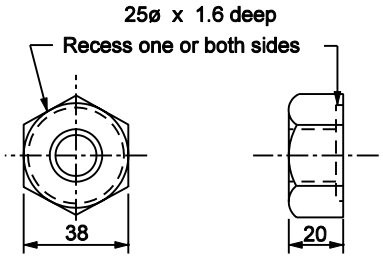

M16 RECESS NUT

M16 HEX HEAD BOLT AND RECESS NUT

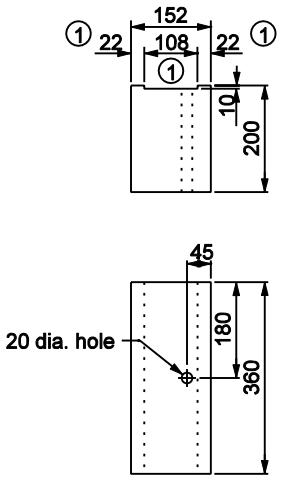

TIMBER BLOCK DETAIL

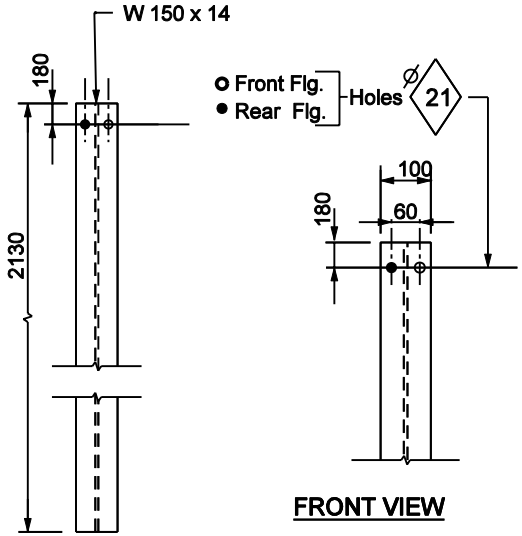

FRONT VIEW

FRONT VIEW

HOLE PATTERN

STEEL POST DETAIL

All Dimension are in mm unless otherwise specfied

INDIANA DEPARTMENT OF TRANSPORTATION

W - BEAM
GUARDRAIL COMPONENTS

MARCH 2003

STANDARD DRAWING NO. 601-WBGC-03

RICHARD L. VanCLEAVE REGISTERED No. 9750 STATE OF INDIANA PROFESSIONAL ENGINEER

DESIGN STANDARDS ENGINEER

/s/ Richard L. VanCleave 3-03-03
DESIGN STANDARDS ENGINEER DATE

/s/ Richard K. Smutzer 3-03-03
CHIEF HIGHWAY ENGINEER DATE