Radius	A	B	C	D
310	70	240	285	70
340	55	265	250	110
380	45	290	220	150
420	40	320	185	185
460	30	340	160	220

GENERAL NOTES

1. This sheet shall be used when guardrail transition type GP is specified to connect W-beam guardrail to a pier or frame bent collision wall.

2. The details on this sheet are for the assembly and installation of the deflector components for connecting guardrail transition type GP to a pier or frame bent collision wall.

(3) See Standard Drawing 601-TPGP-01 for anchor bolt and plate washer details.

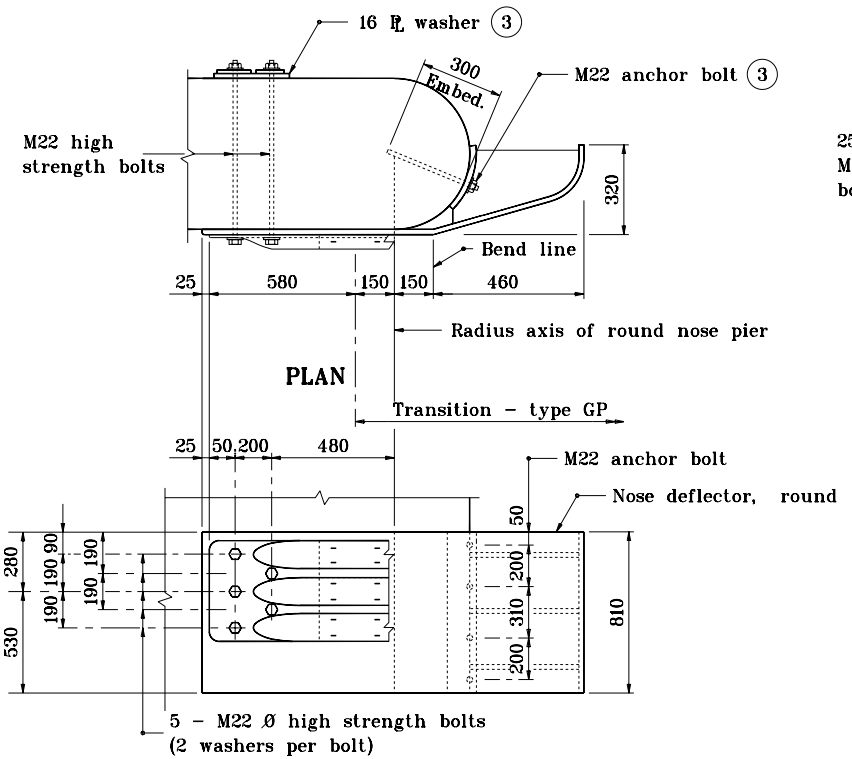

ELEVATION

ATTACHMENT AT ROUND NOSE PIER

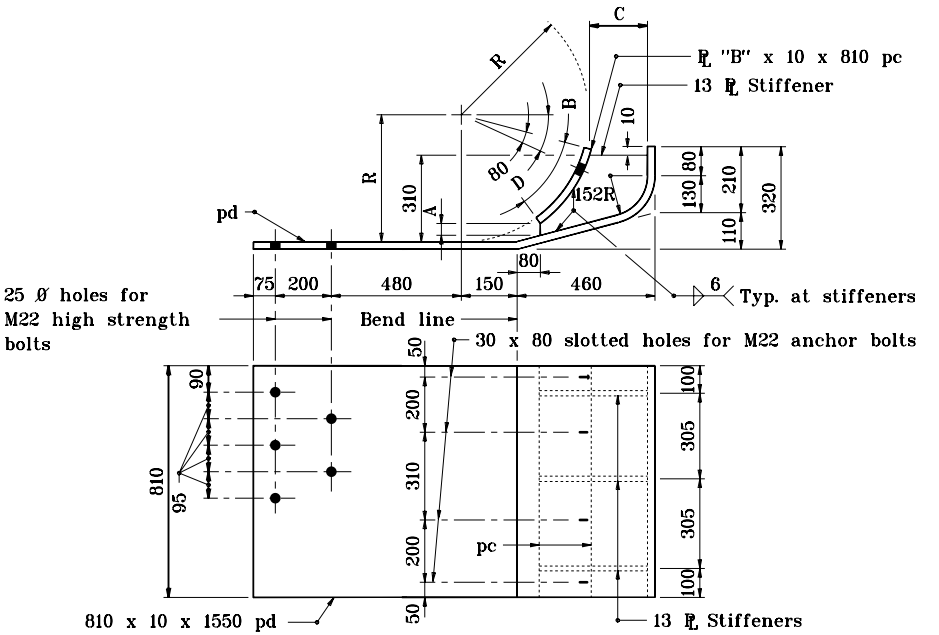

DETAIL OF NOSE DEFLECTOR - ROUND

All dimensions are in mm unless otherwise specified.

INDIANA DEPARTMENT OF TRANSPORTATION

TRANSITION AT PIER
TYPE GP

SEPTEMBER 1998

STANDARD DRAWING NO. **601-TPGP-02**

ANTHONY L. UREMOVICH REGISTERED No. 18095 STATE OF INDIANA PROFESSIONAL ENGINEER

DESIGN STANDARDS ENGINEER

/s/ Anthony L. Uremovich 9-01-98
DESIGN STANDARDS ENGINEER DATE

/s/ Donald W. Lucas 9-01-98
CHIEF HIGHWAY ENGINEER DATE

Source Sheet: T-4