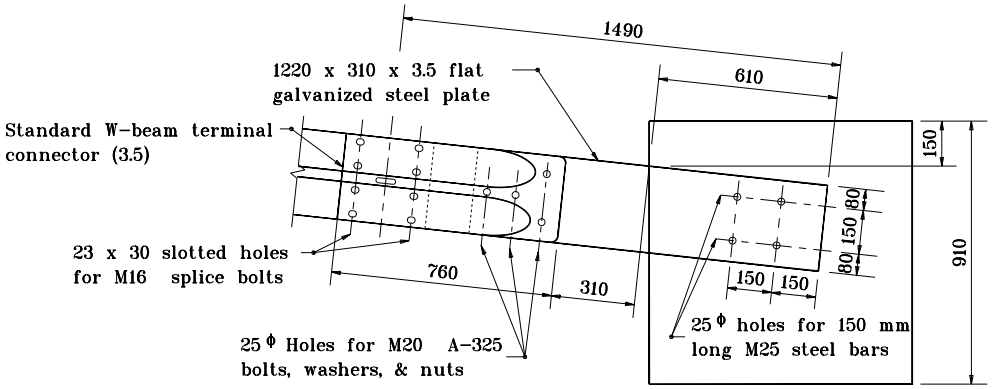

CONCRETE ANCHOR DETAIL

GENERAL NOTES

1. This sheet shall be used when guardrail end treatment type I is specified.
2. The details on this sheet are for the assembly and installation of the components of guardrail end treatment type I.
3. (3) The top of rail height at this post shall match the height of the adjacent guardrail.
4. Installation of guardrail end treatment type I at the end of a run of rub-rail type guardrail shall require the relocation of the rub-rail as shown.
5. (5) See Standard Drawing 601-GRET-04 for Post No. 2 Connection Detail.
6. If rub-rail is not spliced at post, the channel shall be cut and repositioned behind the flange.
7. If rub-rail is spliced at post, the splice material shall be removed and the channel shall be repositioned behind the flange.

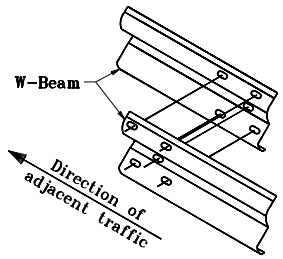

LAP DETAIL

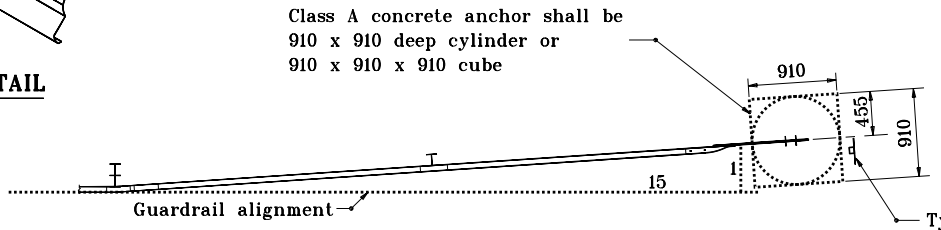

PLAN

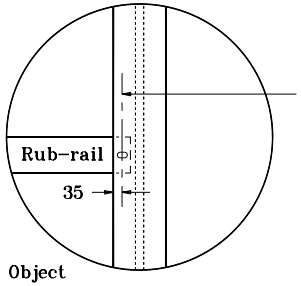

20 x 50 slot in channel
20 hole in flange.
Install M16 hex bolt with hex nut and 2 cut washers.

RUB-RAIL RELOCATION DETAIL

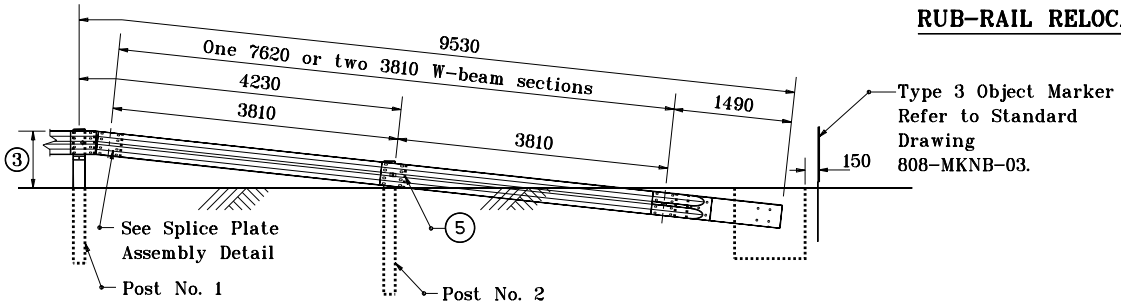

Post No. 1 & No. 2 length = 1830

ELEVATION

All dimensions are in mm unless otherwise specified.

INDIANA DEPARTMENT OF TRANSPORTATION

GUARDRAIL END TREATMENT TYPE I

NOVEMBER 1995

STANDARD DRAWING NO. **601-GRET-05**

ANTHONY L. UREMOVICH REGISTERED No. 18095 STATE OF INDIANA PROFESSIONAL ENGINEER

DESIGN STANDARDS ENGINEER

/s/ Anthony L. Uremovich 11-01-95
DESIGN STANDARDS ENGINEER DATE

/s/ Donald W. Lucas 11-01-95
CHIEF HIGHWAY ENGINEER DATE

Source Sheet: E-1