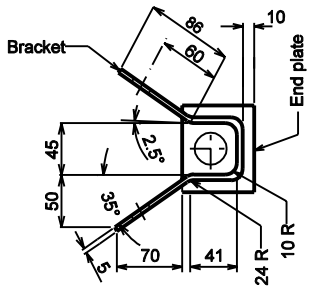

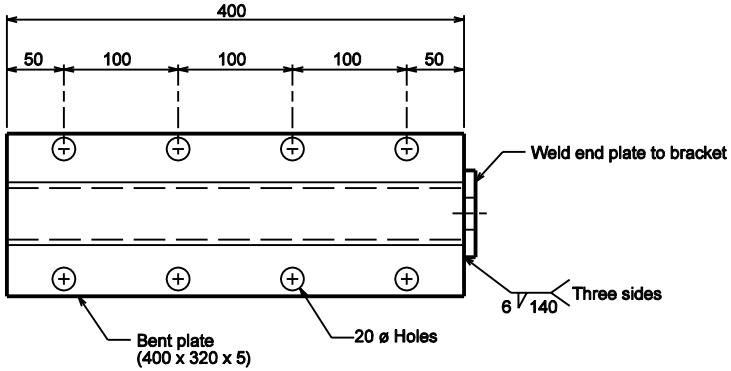

BRACKET

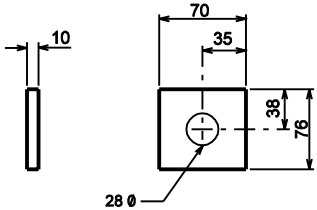

END PLATE

All Dimension are in mm unless otherwise specfied

INDIANA DEPARTMENT OF TRANSPORTATION

CABLE TERMINAL
ANCHOR SYSTEM

SEPTEMBER 2001

STANDARD DRAWING NO. 601-GCTA-05

RICHARD L. VANCLEAVE REGISTERED No. 9750 STATE OF INDIANA PROFESSIONAL ENGINEER

DESIGN STANDARDS ENGINEER

/s/ Richard L.VanCleave 9-04-01
DESIGN STANDARDS ENGINEER DATE

/s/ Firooz Zandi 9-04-01
CHIEF HIGHWAY ENGINEER DATE

GUARDRAIL ANCHOR BRACKET