GENERAL NOTES

1. This sheet shall be used in conjunction with Standard Drawings 601-CWGS-01 through 04 when a curved W-beam guardrail system is specified.

2. The details on this sheet are for the standard components of the curved W-beam guardrail systems.

3. The 60 x 60 structural tube shall only be welded to Post B.

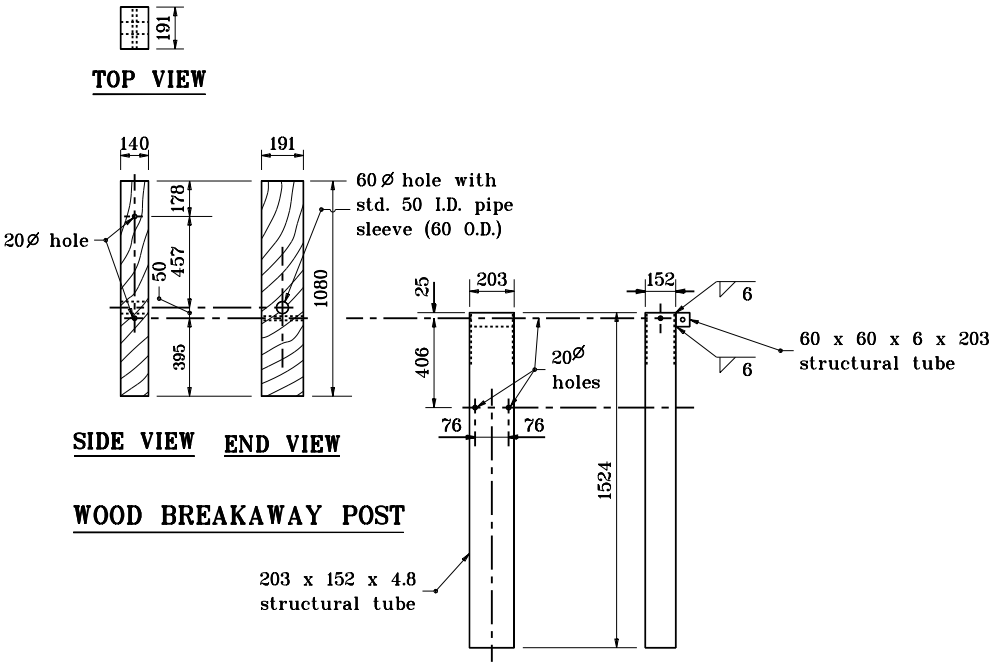

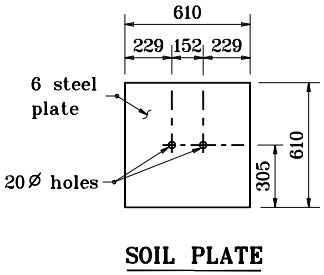

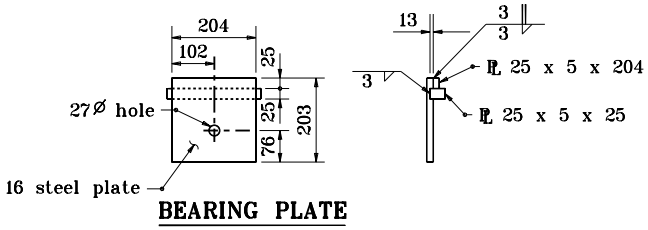

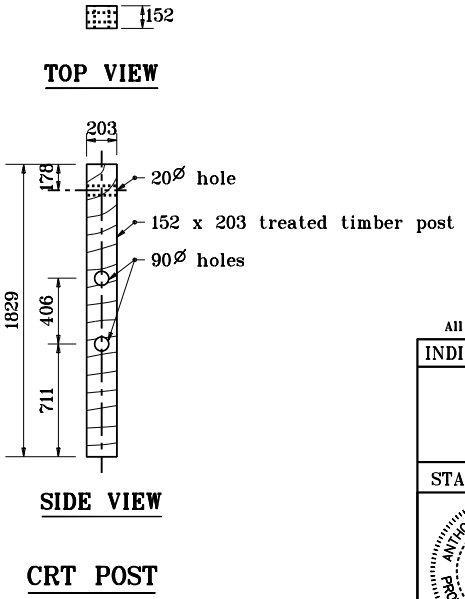

All dimensions are in mm unless otherwise specified.

INDIANA DEPARTMENT OF TRANSPORTATION

CURVED W-BEAM GUARDRAIL SYSTEM

APRIL 1995

STANDARD DRAWING NO. **601-CWGS-06**

ANTHONY L. UREMOVICH REGISTERED No. 18095 STATE OF INDIANA PROFESSIONAL ENGINEER

/s/ Anthony L. Uremovich 4-03-95
DESIGN STANDARDS ENGINEER DATE

/s/ Donald W. Lucas 4-03-95
CHIEF HIGHWAY ENGINEER DATE

DESIGN STANDARDS ENGINEER

Source Sheet: E-4B