GENERAL NOTES

1. This sheet shall be used with Standard Drawings 601-CWGS-01, 02, 03 and 06.
2. Only one M16 dia. x 250 bolt with nut and washer is required per steel tube and post.
3. Plate washers shall be used only where indicated.

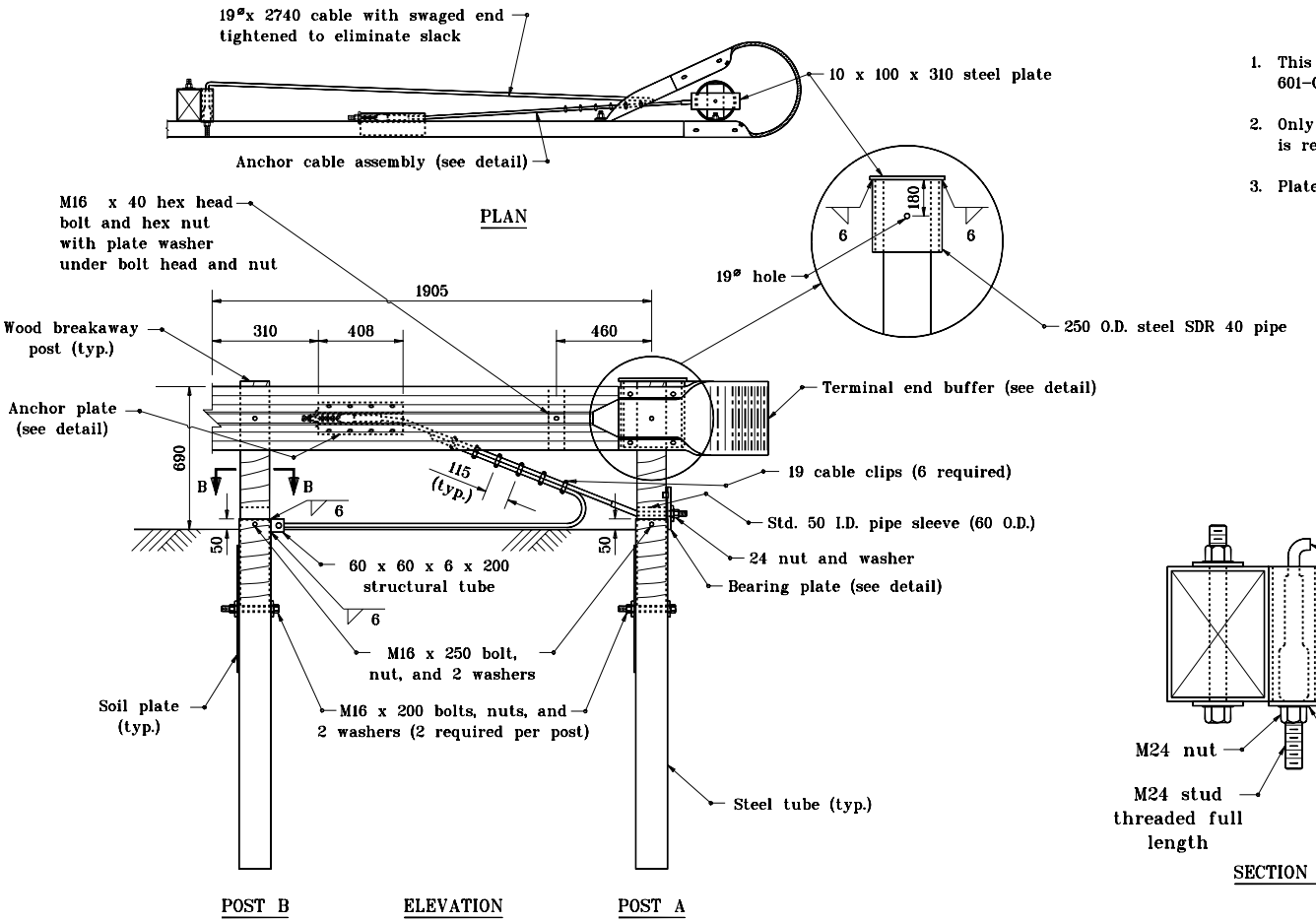

TYPE 5 ANCHOR

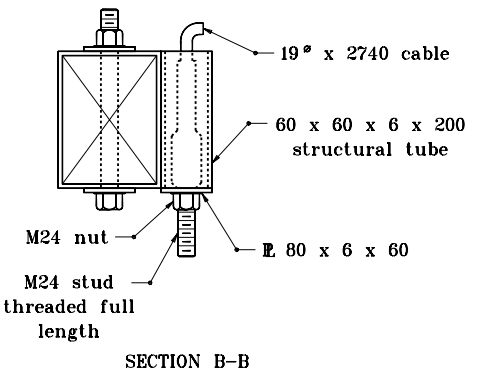

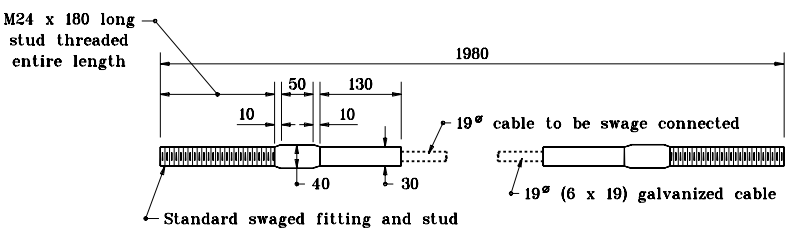

ANCHOR CABLE ASSEMBLY

All dimensions are in mm unless otherwise specified.

INDIANA DEPARTMENT OF TRANSPORTATION

CURVED W-BEAM GUARDRAIL SYSTEM

MARCH 2002

STANDARD DRAWING NO. **601-CWGS-04**

RICHARD L. VanCLEAVE REGISTERED No. 9750 STATE OF INDIANA PROFESSIONAL ENGINEER

DESIGN STANDARDS ENGINEER

/s/ Richard L. VanCleave 3-01-02
DESIGN STANDARDS ENGINEER DATE

/s/ Richard K. Smutzer 3-01-02
CHIEF HIGHWAY ENGINEER DATE