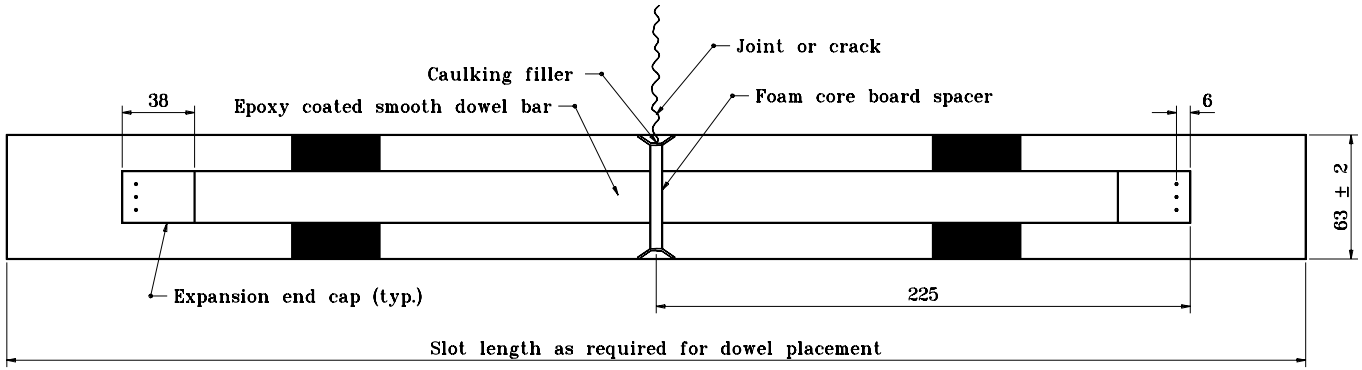

PLAN

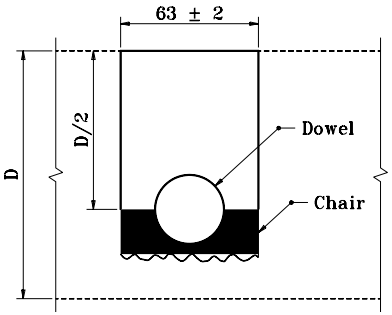

SECTION A–A

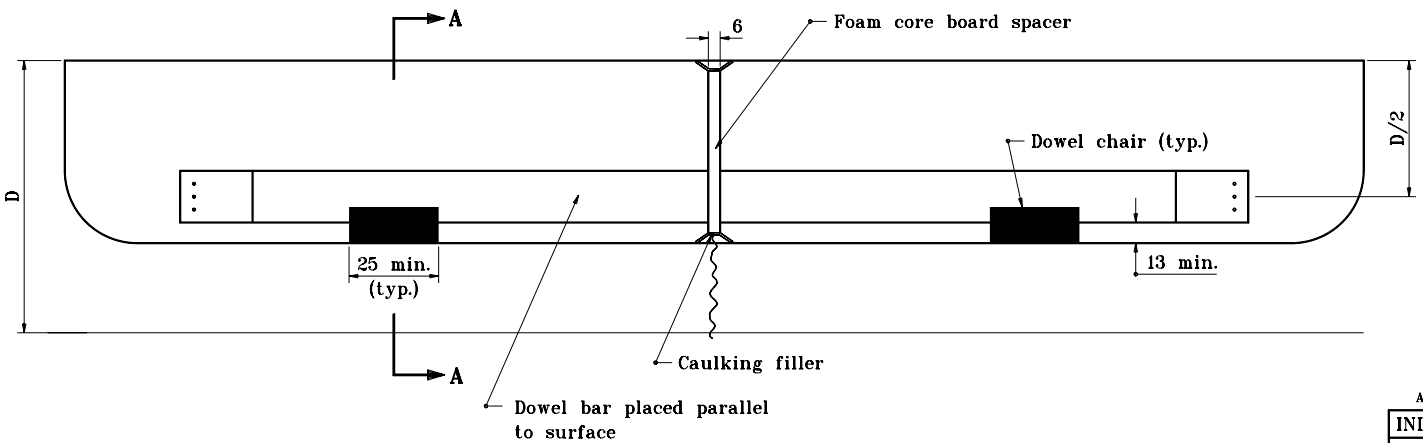

ELEVATION

DOWEL SLOT DETAILS

NOTES:

1. For dowel slot layout requirements, see Standard Drawing 305–RLTC–02.

DOWEL BAR SIZES	
Pavement Thickness D	Minimum Dowel Bar Diameter
Less than 300	32
Greater than or equal to 300	38

All dimensions are in mm unless otherwise specified.

INDIANA DEPARTMENT OF TRANSPORTATION

RETROFIT LOAD TRANSFER FOR PCCP

SEPTEMBER 1999

STANDARD DRAWING NO. **305–RLTC–01**

ANTHONY L. UREMOVICH REGISTERED No. 18095 STATE OF INDIANA PROFESSIONAL ENGINEER

DESIGN STANDARDS ENGINEER

/s/ Anthony L. Uremovich 9–01–99
DESIGN STANDARDS ENGINEER DATE

/s/ Donald W. Lucas 9–01–99
CHIEF HIGHWAY ENGINEER DATE

Source Sheet: NONE