GENERAL NOTES

1. Dimensions will vary based on right-of-way availability. Silt fence shall be placed as close as possible to edge of construction limits.

2. The spacing of the tiebacks shall equal the spacing of the posts. Additional post depth or tiebacks may be required in unstable soils.

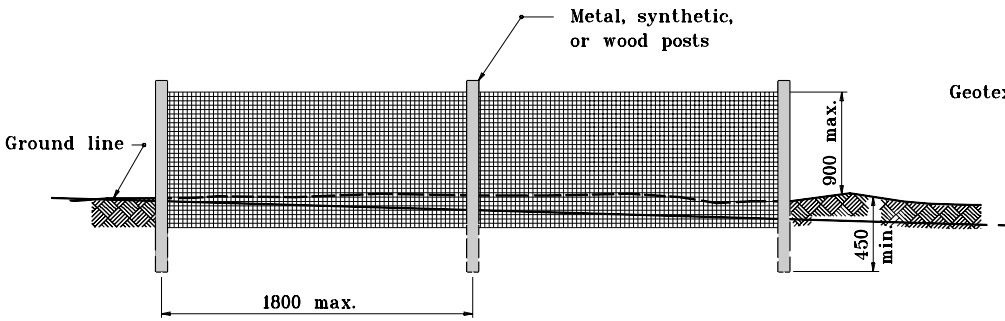

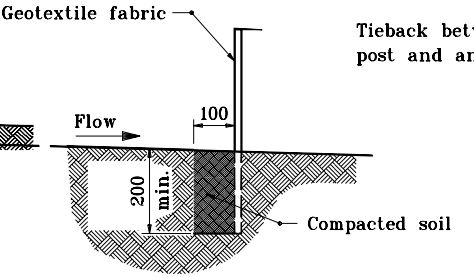

EMBEDMENT DETAIL

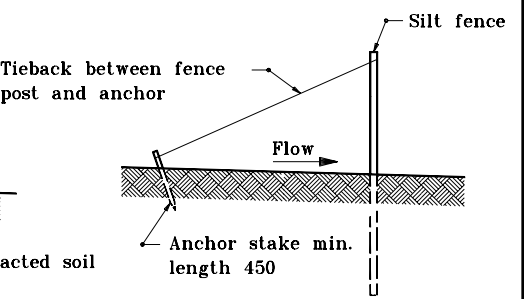

TIEBACK DETAIL (2)

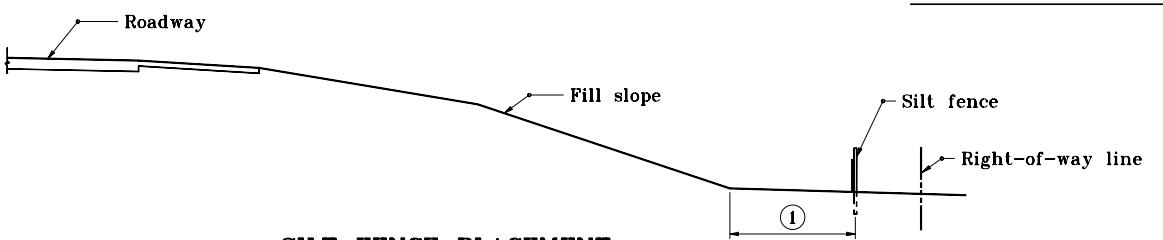

SILT FENCE PLACEMENT RELATIVE TO R/W LINE

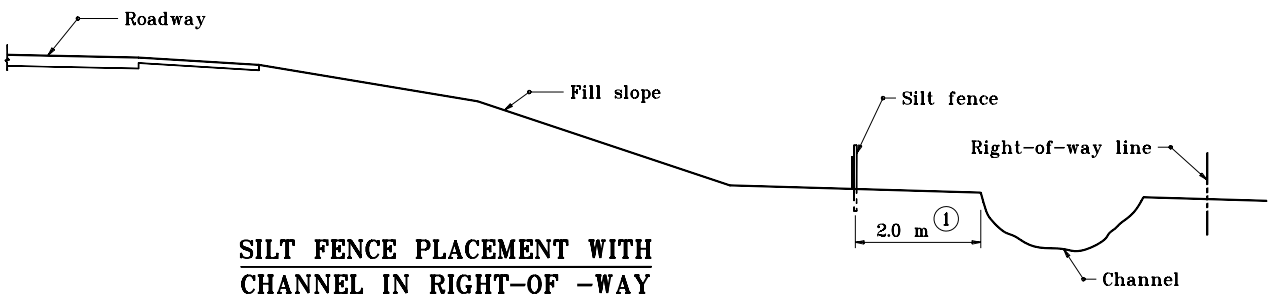

SILT FENCE PLACEMENT WITH CHANNEL IN RIGHT-OF -WAY

All dimensions are in mm unless otherwise specified.

INDIANA DEPARTMENT OF TRANSPORTATION

TEMPORARY SILT FENCE

MARCH 2002

STANDARD DRAWING NO. **205-TECP-02**

RICHARD L. VanCLEAVE REGISTERED No. 9750 STATE OF INDIANA PROFESSIONAL ENGINEER

DESIGN STANDARDS ENGINEER

/s/ Richard L. VanCleave — DESIGN STANDARDS ENGINEER — 3-01-02 DATE

/s/ Richard K. Smutzer — CHIEF HIGHWAY ENGINEER — 3-01-02 DATE