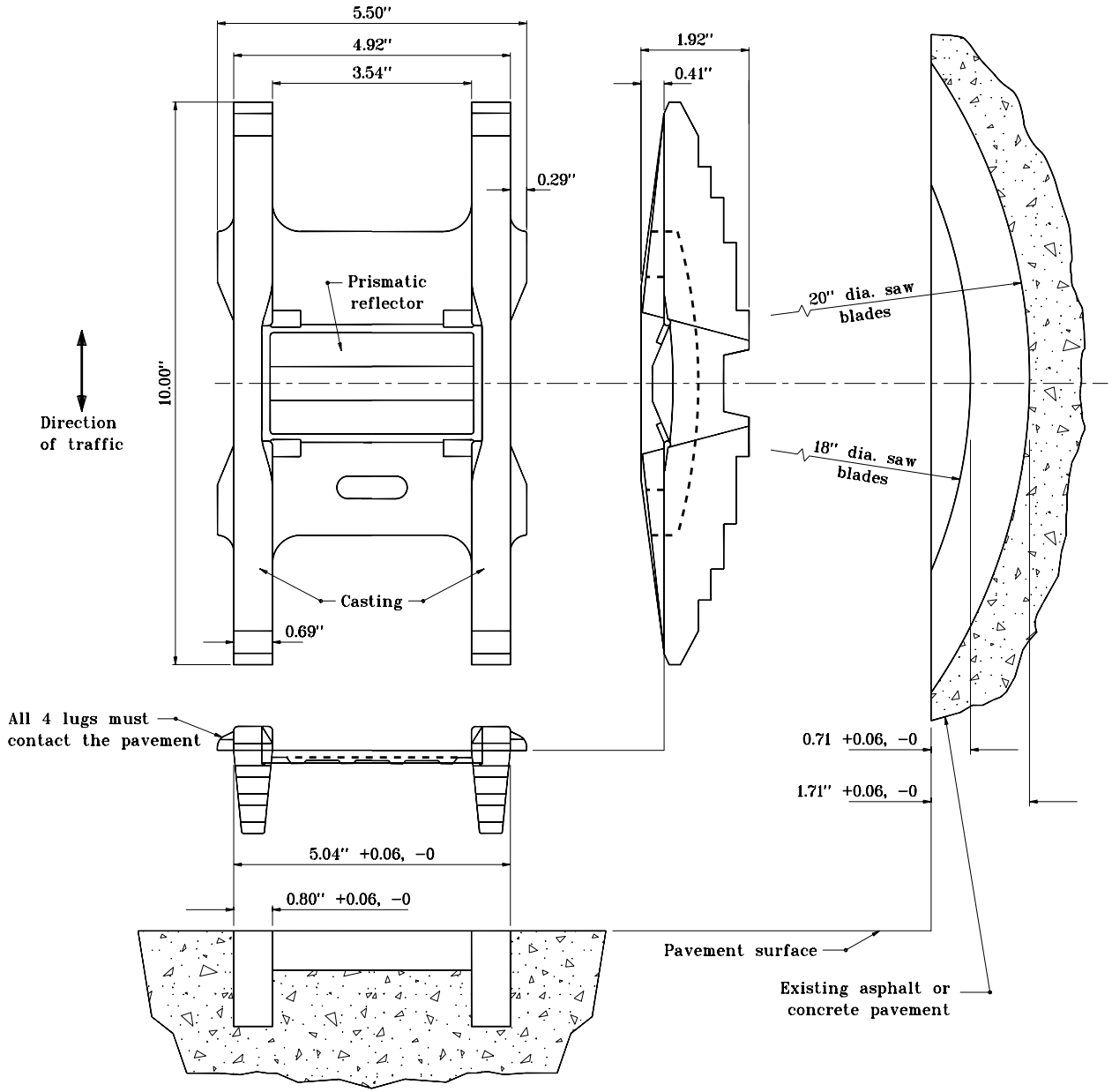

INDIANA DEPARTMENT OF TRANSPORTATION

RAISED PAVEMENT MARKERS CAST METAL BASE, TYPE 2

JANUARY 2000

STANDARD DRAWING NO. **E 808-MKRM-11**

ANTHONY L. UREMOVICH REGISTERED No. 18095 STATE OF INDIANA PROFESSIONAL ENGINEER

DESIGN STANDARDS ENGINEER

/s/ Anthony L. Uremovich — DESIGN STANDARDS ENGINEER — 1-03-00 DATE

/s/ Firooz Zandi — CHIEF HIGHWAY ENGINEER — 1-03-00 DATE