GENERAL NOTES

1. The tip of the lane indication arrow closest to the stop line shall be 20 ft in advance of the nearest edge of the stop line.

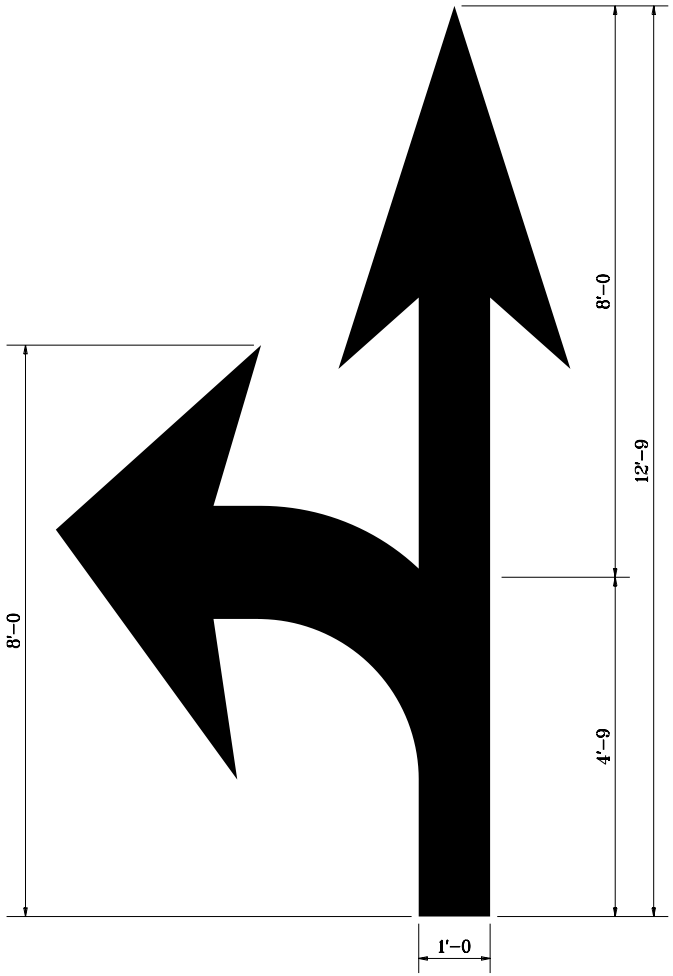

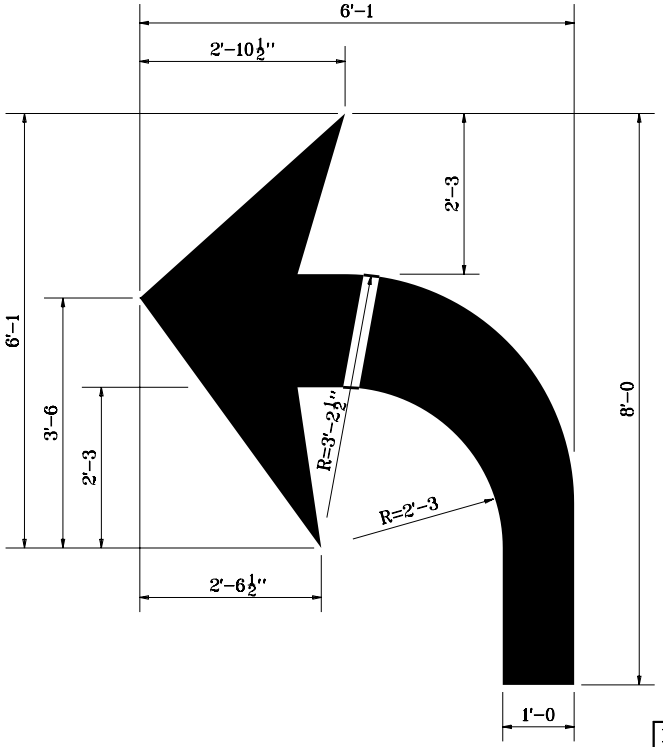

INDIANA DEPARTMENT OF TRANSPORTATION

TRANSVERSE MARKINGS

MARCH 1995

STANDARD DRAWING NO **E 808-MKPM-02**

ANTHONY L. UREMOVICH REGISTERED No. 18095 STATE OF INDIANA PROFESSIONAL ENGINEER

DESIGN STANDARDS ENGINEER

DETAILS PLACED IN THIS FORMAT	7-27-99
/s/ Anthony L. Uremovich DESIGN STANDARDS ENGINEER	7-27-99 DATE
/s/ Firooz Zandi CHIEF HIGHWAY ENGINEER	7-27-99 DATE
ORIGIANLLY APPROVED	3-01-95