GENERAL NOTES

1. The tip of the lane indication arrow shall be 20 ft in advance of the nearest edge of the stop line.

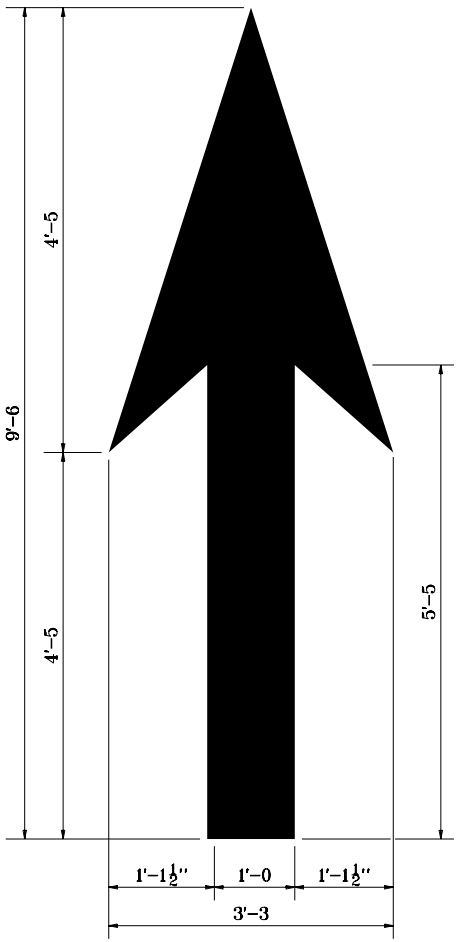

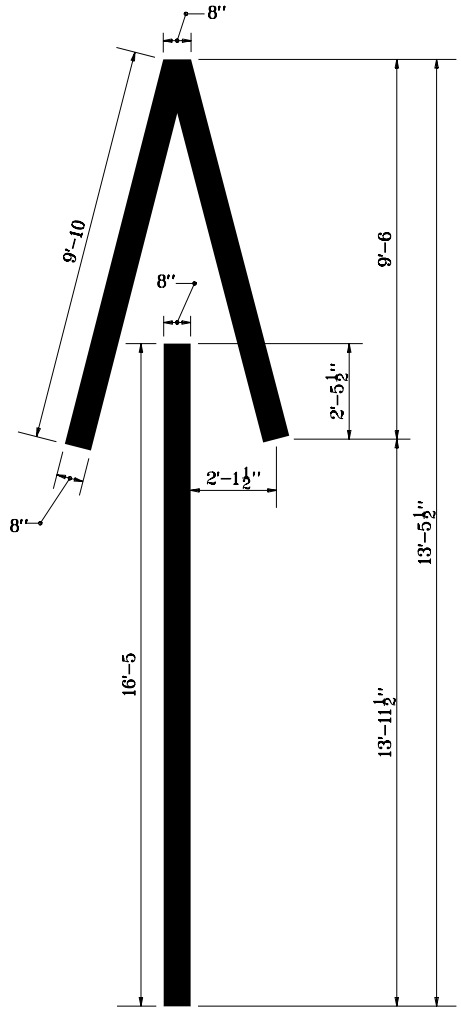

WRONG WAY RAMP ARROW

INDIANA DEPARTMENT OF TRANSPORTATION	
TRANSVERSE MARKINGS	
MARCH 1995	
STANDARD DRAWING NO. **E 808-MKPM-01**	
ANTHONY L. UREMOVICH REGISTERED No. 18095 STATE OF INDIANA PROFESSIONAL ENGINEER	DETAILS PLACED IN THIS FORMAT 7-27-99
	/s/ Anthony L. Uremovich 7-27-99 — DESIGN STANDARDS ENGINEER — DATE
	/s/ Firooz Zandi 7-27-99 — CHIEF HIGHWAY ENGINEER — DATE
DESIGN STANDARDS ENGINEER	ORIGINALLY APPROVED 3-01-95