GENERAL NOTES

1. Retaining wall detail is used for tower installed on sloping ground.
2. Slope grading around the concrete pad to be as shown unless otherwise directed.

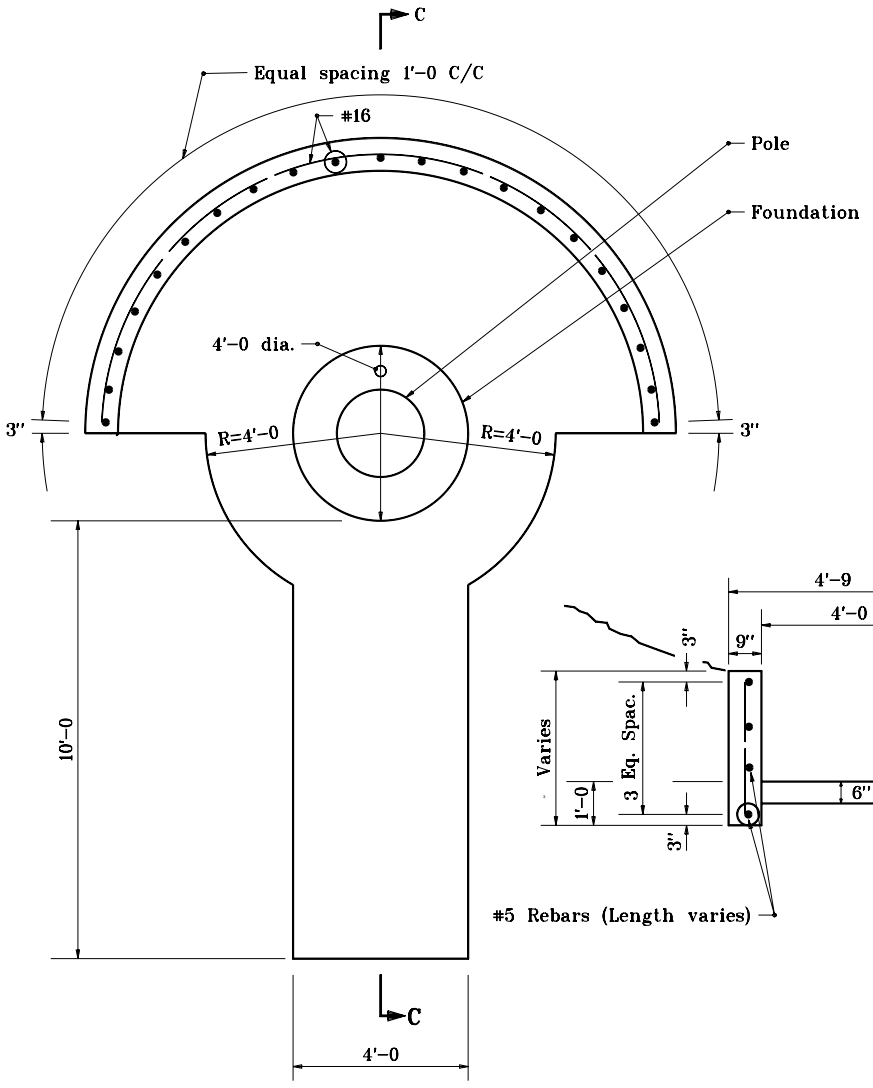

EXTERNAL WINCH CONCRETE PAD
WITH RETAINING WALL

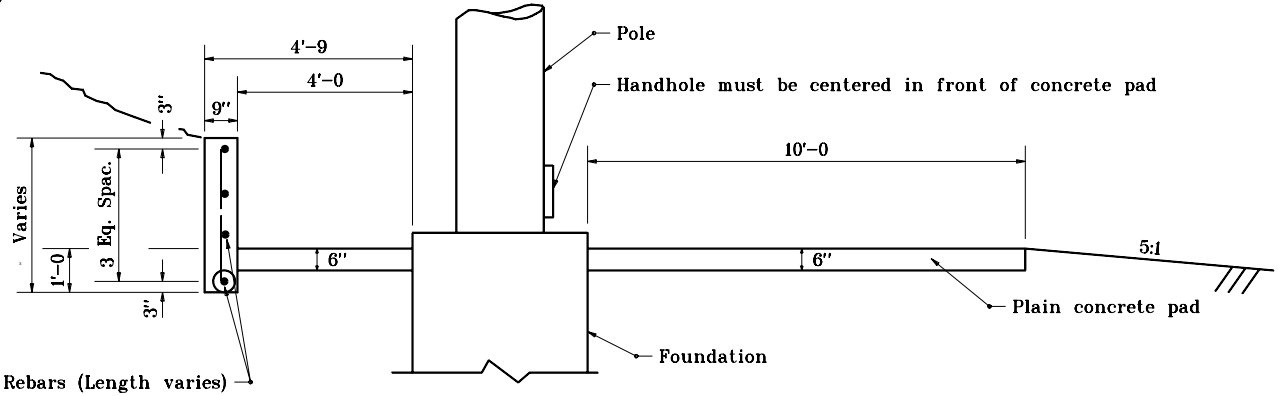

SECTION C-C

INDIANA DEPARTMENT OF TRANSPORTATION

HIGH MAST TOWER CONCRETE PAD

JANUARY 2000

STANDARD DRAWING NO. **E 807-LTHM-04**

ANTHONY L. UREMOVICH REGISTERED No. 18095 STATE OF INDIANA PROFESSIONAL ENGINEER

DESIGN STANDARDS ENGINEER

/s/ Anthony L. Uremovich — DESIGN STANDARDS ENGINEER — 1-03-00 DATE

/s/ Firooz Zandi — CHIEF HIGHWAY ENGINEER — 1-03-00 DATE