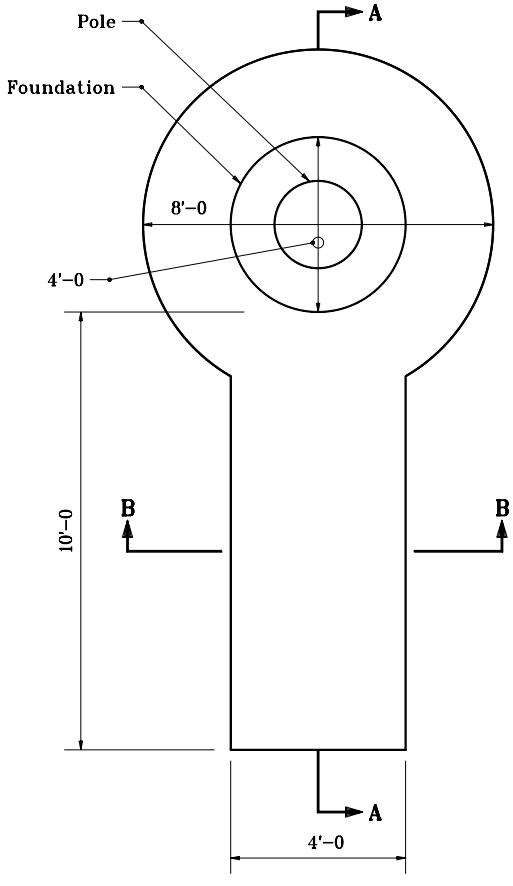

EXTERNAL WINCH CONCRETE PAD
WITHOUT RETAINING WALL

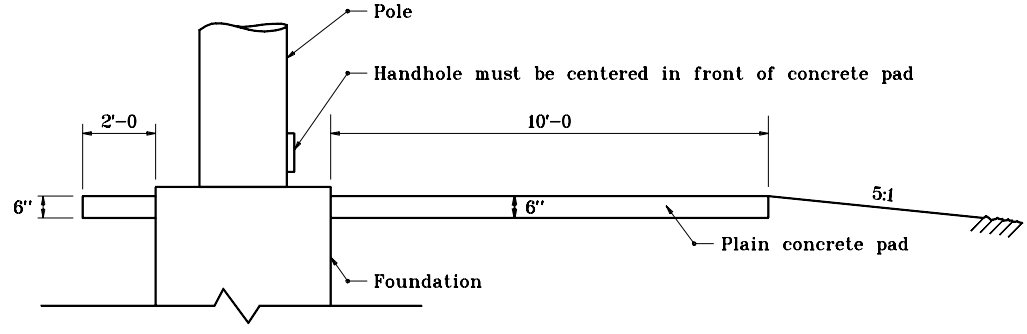

SECTION A-A

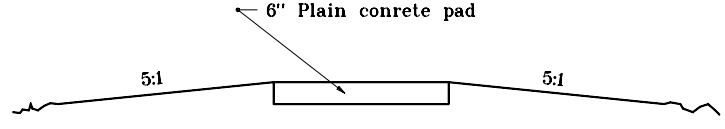

SECTION B-B

INDIANA DEPARTMENT OF TRANSPORTATION

HIGH MAST TOWER
CONCRETE PAD

MARCH 1995

STANDARD DRAWING NO. **E 807-LTHM-03**

ANTHONY L. UREMOVICH REGISTERED No. 18095 STATE OF INDIANA PROFESSIONAL ENGINEER

DESIGN STANDARDS ENGINEER

DETAILS PLACED IN THIS FORMAT	7-27-99
/s/ Anthony L. Uremovich DESIGN STANDARDS ENGINEER	7-27-99 DATE
/s/ Firooz Zandi CHIEF HIGHWAY ENGINEER	7-27-99 DATE
ORIGINALLY APPROVED	3-01-95