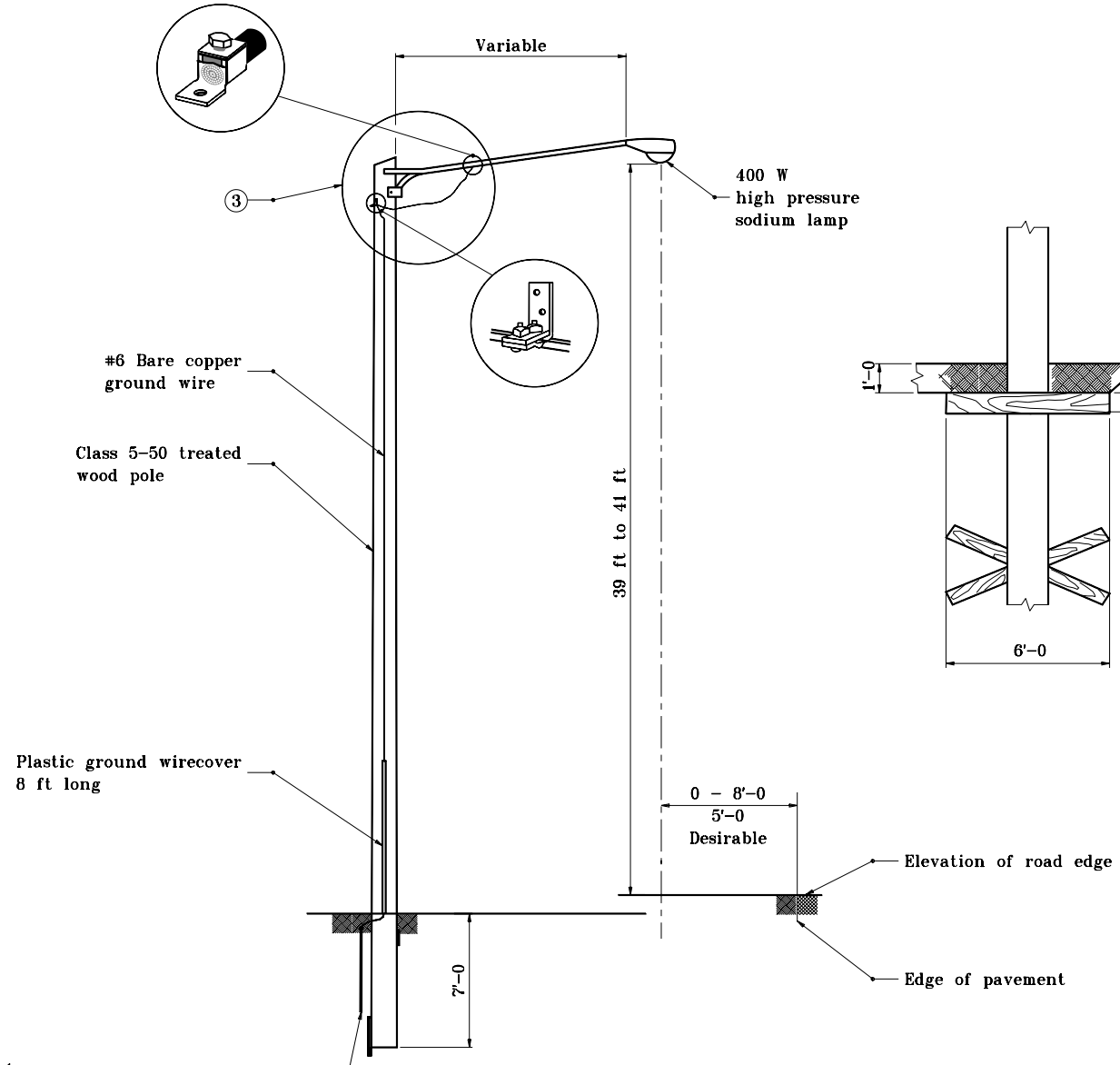

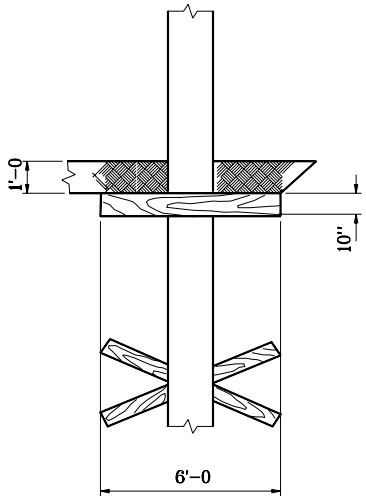

GENERAL NOTES

1. Install 2" x 10" x 6'-0 treated plank 1'-0 below ground surface with inner face directly against pole outer face to be placed against undisturbed earth as near as practicable.

2. Pole key anchor and plank stabilizer to be installed at each major change of overhead line direction and at each end of lighting distribution.

3. See Section on Standard Drawing E 807-LHTI-07.

INDIANA DEPARTMENT OF TRANSPORTATION

TEMPORARY HIGHWAY ILLUMINATION DETAILS

JANUARY 2000

STANDARD DRAWING NO. **E 807-LTHI-06**

ANTHONY L. UREMOVICH REGISTERED No. 18095 STATE OF INDIANA PROFESSIONAL ENGINEER

DESIGN STANDARDS ENGINEER

/s/ Anthony L. Uremovich — DESIGN STANDARDS ENGINEER — 1-03-00 DATE

/s/ Firooz Zandi — CHIEF HIGHWAY ENGINEER — 1-03-00 DATE