GENERAL NOTES

(1) Alternate 6" x 6" x $\frac{1}{2}$" sq. washer with hex nut welded to lower end.

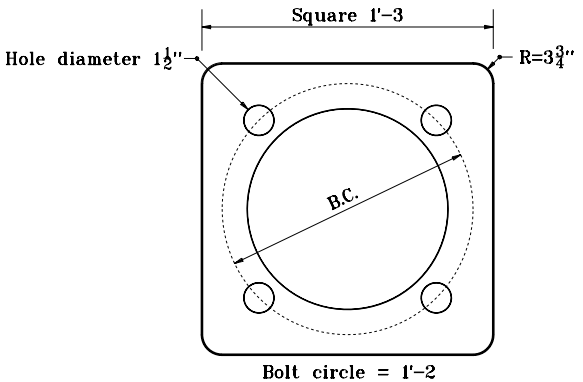

STEEL BASE PLATE DETAIL

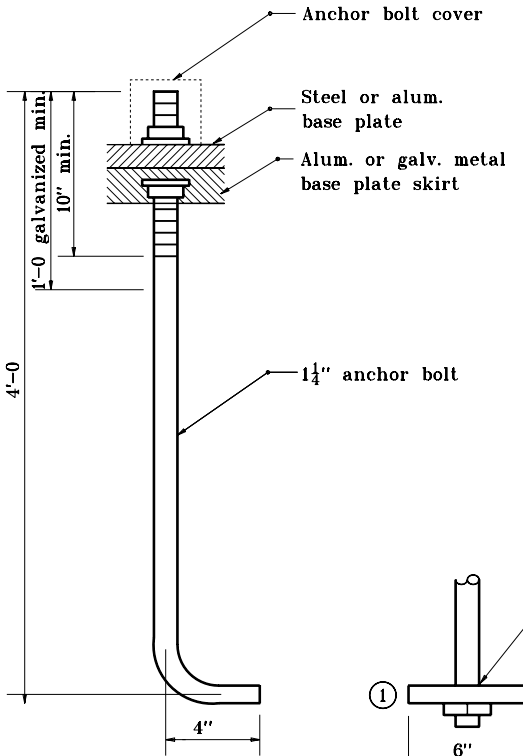

DETAIL D

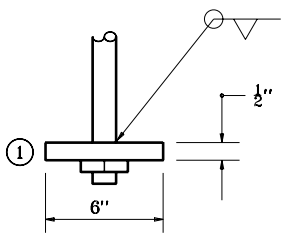

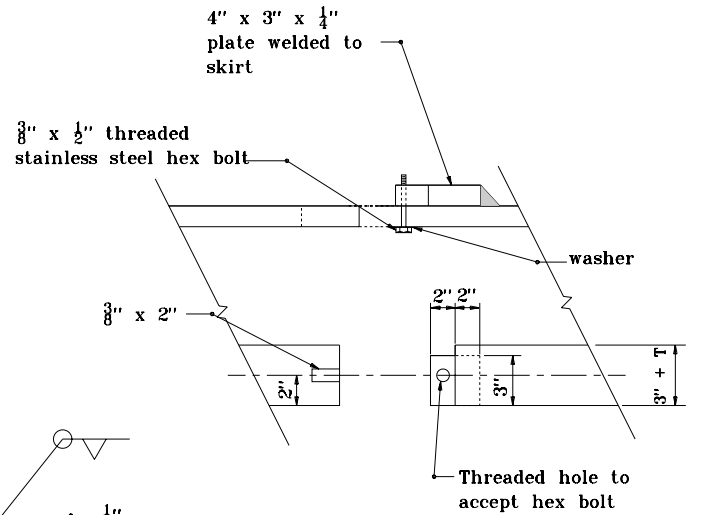

T = Thickness of anchor base

DETAIL A

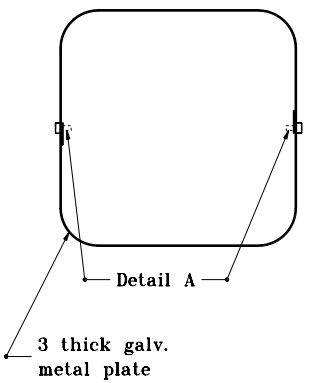

METAL COVER DETAIL

INDIANA DEPARTMENT OF TRANSPORTATION

SIGNAL CANTILEVER ANCHOR BOLTS, PLATES, AND COVERS

SEPTEMBER 1998

STANDARD DRAWING NO. E 805-SGMA-05

ANTHONY L. UREMOVICH REGISTERED No. 18095 STATE OF INDIANA PROFESSIONAL ENGINEER

DESIGN STANDARDS ENGINEER

DETAILS PLACED IN THIS FORMAT	11-15-99
/s/ Anthony L. Uremovich DESIGN STANDARDS ENGINEER	11-15-99 DATE
/s/ Firooz Zandi CHIEF HIGHWAY ENGINEER	11-15-99 DATE
ORIGINALLY APPROVED	9-01-98