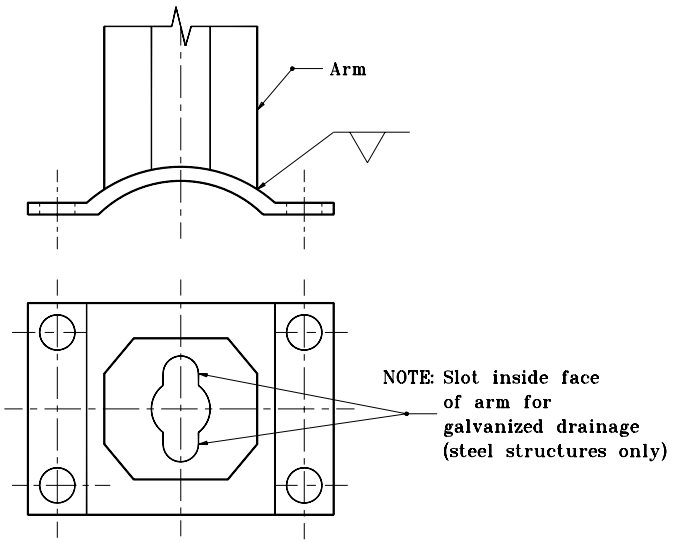

(Connection clamp)

DETAIL A

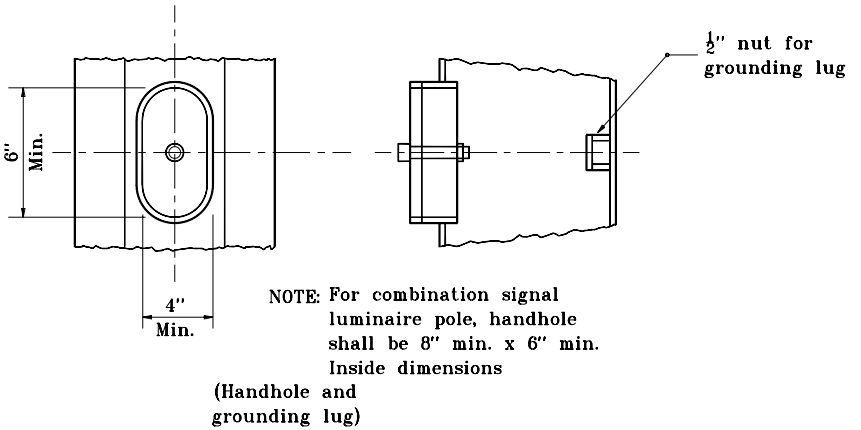

(Handhole and grounding lug)

DETAIL B

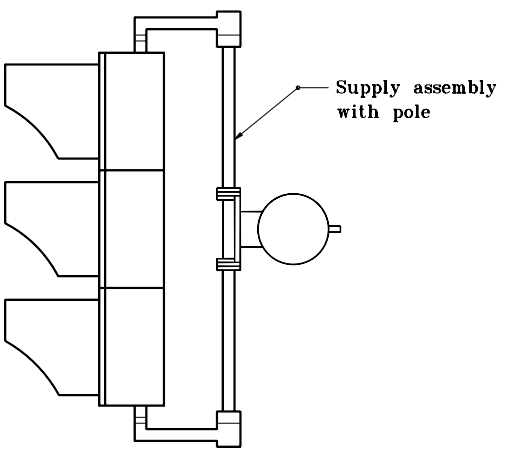

(Signal Head Mounting Assembly – Typ.)

DETAIL C

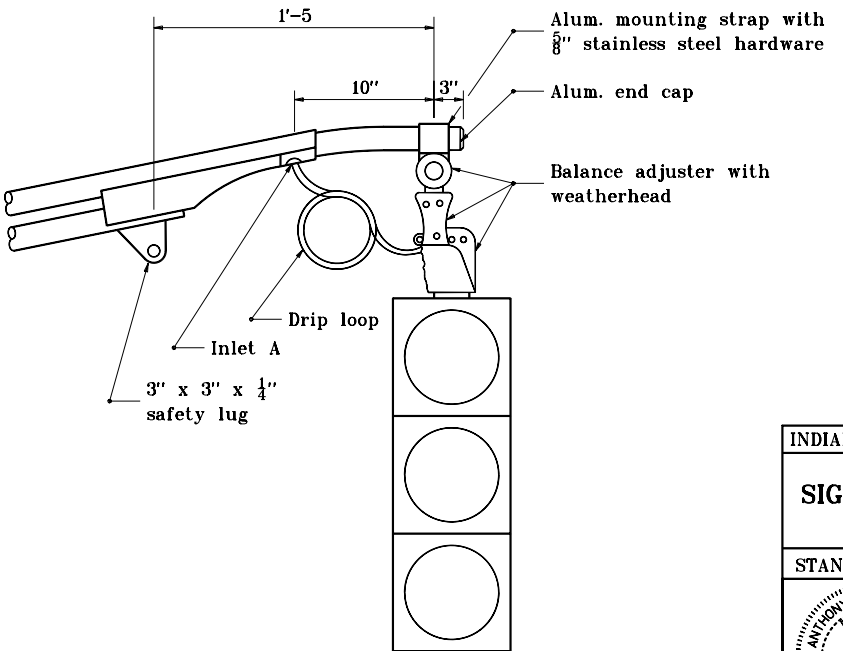

DETAIL D

INDIANA DEPARTMENT OF TRANSPORTATION

SIGNAL CANTILEVER DETAILS

MAY 1998

STANDARD DRAWING NO. **E 805-SGMA-04**

ANTHONY L. UREMOVICH REGISTERED No. 18095 STATE OF INDIANA PROFESSIONAL ENGINEER

DESIGN STANDARDS ENGINEER

DETAILS PLACED IN THIS FORMAT	11-15-99
/s/ Anthony L. Uremovich DESIGN STANDARDS ENGINEER	11-15-99 DATE
/s/ Firooz Zandi CHIEF HIGHWAY ENGINEER	11-15-99 DATE
ORIGINALLY APPROVED	5-01-98