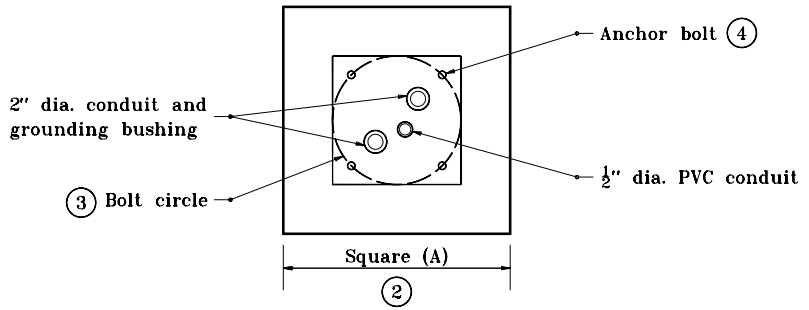


## GENERAL NOTES

1. Top 6" of foundation may be squared.

(2) A round foundation may be supplied in lieu of square using the following equivalent (A) dimensions:
2'-6 Square = 3'-0 Round
3'-0 Square = 3'-6 Round

(3) See Base Plate Detail on Standard Drawing E 805-SGMA-05.

(4) See Standard Drawing E 805-SGMA-05 for Detail D.

| SIGNAL CANTILEVER FOUNDATION DIMENSIONS | | |
|---|---|---|
| ARM LENGTH (L), ft | SQUARE (A) | FDN. DEPTH (B) |
| 12,15,20,25 | 2'-6 | 7 ft |
| 30,35,40 All Twin Arms | 3'-0 | 8 ft |
| * Combination Pole (With Luminaire) | 3'-0 | 8 ft |

* Requires 4-#3 x 7'-9 as shown on foundation detail.

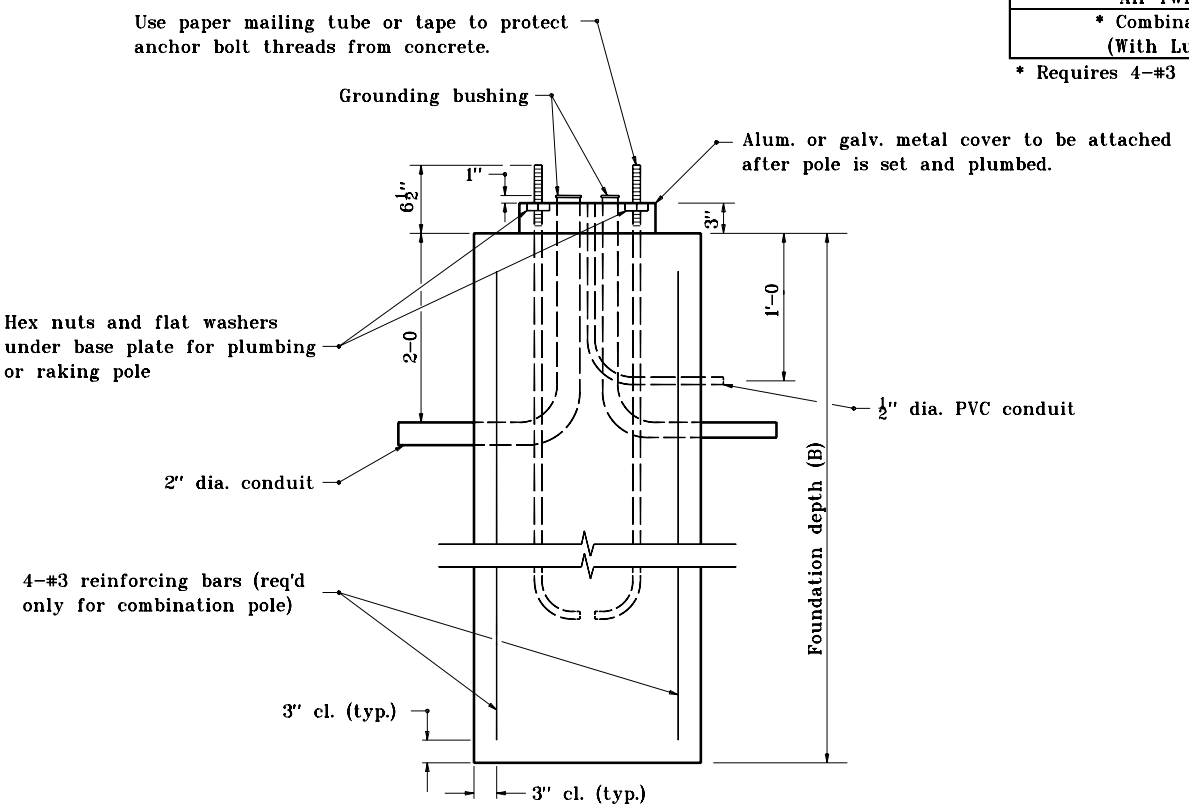


INDIANA DEPARTMENT OF TRANSPORTATION

**SIGNAL CANTILEVER FOUNDATION DETAIL**

SEPTEMBER 1998

STANDARD DRAWING NO. **E 805-SGMA-03**

ANTHONY L. UREMOVICH REGISTERED No. 18095 STATE OF INDIANA PROFESSIONAL ENGINEER

DESIGN STANDARDS ENGINEER

DETAILS PLACED IN THIS FORMAT 11-15-99

/s/ Anthony L. Uremovich 11-15-99
DESIGN STANDARDS ENGINEER DATE

/s/ Firooz Zandi 11-15-99
CHIEF HIGHWAY ENGINEER DATE

ORIGINALLY APPROVED 9-01-98