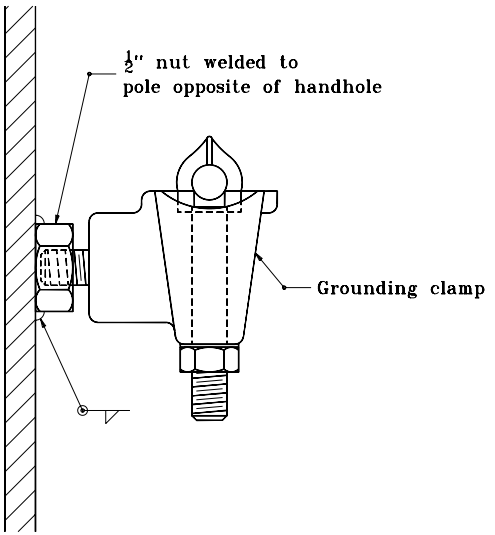

ALUMINUM POLES

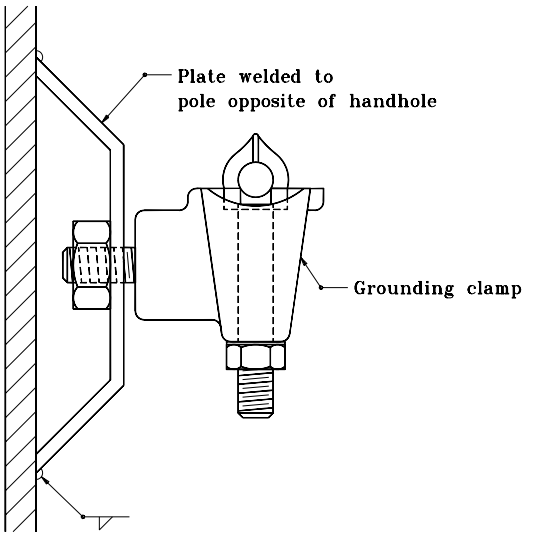

STEEL POLES

GROUNDING POST DETAIL

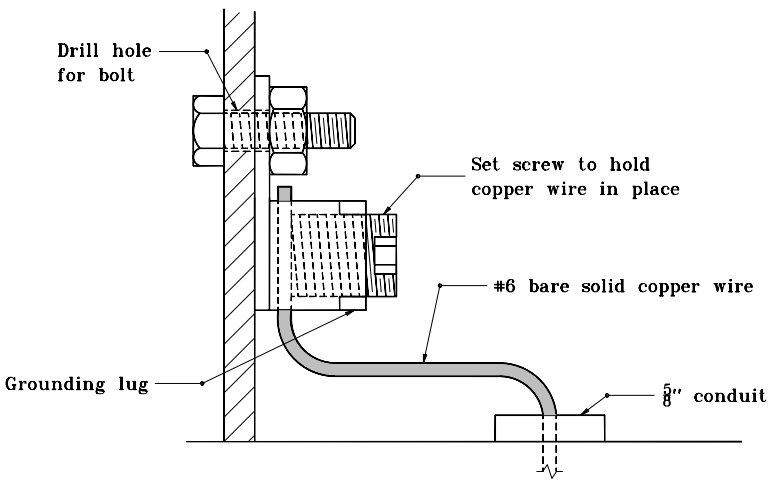

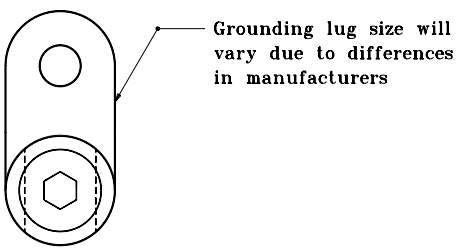

GROUNDING LUG DETAIL
(FIELD CONNECTION)

INDIANA DEPARTMENT OF TRANSPORTATION

GROUNDING DETAILS

MARCH 1995

STANDARD DRAWING NO. **E 805-SGGR-03**

ANTHONY L. UREMOVICH REGISTERED No. 18095 STATE OF INDIANA PROFESSIONAL ENGINEER

DESIGN STANDARDS ENGINEER

DETAILS PLACED IN THIS FORMAT	11-15-99
/s/ Anthony L. Uremovich DESIGN STANDARDS ENGINEER	11-15-99 DATE
/s/ Firooz Zandi CHIEF HIGHWAY ENGINEER	11-15-99 DATE
ORIGINALLY APPROVED	3-01-95